SERVICE MANUAL

SYSTEM 8X8 AUDIO

MATRIX

PX/RM/LM-8000

interM

www.inter-m.com
MADE IN KOREA

interM

CONTENTS

Specifications 1
Electrical Parts List . . . . . 2~ 8
Top and Bottom View of P.C.Board . . . . . 8~ 22
Wiring Diagram . . . . . 23~ 24
Block Diagram . . . . . 25~ 26
Schematic Diagram . . . . . 27~ 44
Exploded View of Cabinet & Chassis / Mechanical Parts List . . . . . 45~ 50

SPECIFICATIONS

0dB = 1Vrms

		PX-8000	RM-8000	LM-8000
Audio Output		0dB(Balanced)		
Audio Input	Paging & RM MIC & LM MIC	-50dB(Balanced)		
	BGM(Main & Local)	-10dB(Balanced)		
Tone Control (100Hz & 10kHz)	Paging MIC	±10dB		
	Audio Output	±12dB		
Frequency Response	BGM (60Hz ~ 15kHz)	±3dB		
	MIC (100Hz ~ 10kHz)	±3dB		
S/N	BGM	Better than 75dB		
	MIC	Better than 65dB		
T.H.D.	BGM	Less than 0.05%		
	MIC	Less than 0.05%		
Priority Control		Paging MIC > DRP > RM1 > RM2> RM3> RM4 > LM-8000 > Main BGM		
Phantom Power		DC 24V		
Serial Interface (RS-422)	Communication Speed	9600bps		
	Communication Distance	Maximum 300m (UTP CAT5)		
Operation Temperature		-10° C ~ +40° C		
Power Source		100–120VAC or 220–240VAC; 50/60Hz (Supplied AC mains transformer depends on country requirements)		
Power Consumption		60W	-	-
Weight (SET)		7.5kg/16lb	1.5kg/3.2lb	130g/0.28lb
Dimensions (SET)		482(W)x132(H)x380(D)mm 19(W)x5.2(H)x15(D)in	200(W)x70(H)x206(D)mm 7.9(W)x2.8(H)x8.1(D)in	70(W)x114(H)x52(D)mm 2.8(W)x4.5(H)x2.0(D)in

* Specifications and design are subject to change without notice.

ELECTRICAL PARTS LIST (PX-8000)

Ref.	Part No.	Description	Value
MAIN B'D 4000001900			
Q1 Q10	2008606998-T	TR,SG,NPN,300mA,20V,KTD1302,TO-92,TA	KTD1302
Z1	2058500973	DIODE,ZN,500mW,BM,4.7V,DO-35,TA	4.7BM
IC140	2118080436	IC,POW AMP,5W/8ohm,LM384N,DIP14	LM384
IC95 IC107	2128220000	IC UND 2981 ALLEGRO	UND2981
IC85	2138040000	IC,EEPROM,M93C46-WBN6P,DIP8	M93C46-WBN
L4	2698010000	COIL,FER,TOROID,500UH	500uH
R2-3 R26 R73	3039100575-T	RES,MF,10,2W,5%,RA R,TA	10 2W
R75-80			
R25	3039101575-T	RES,MF,100,2W,5%,RA R,TA	100 2W
R28-29 R467	3096103991	RES,ARY,10K,1/5W,5%,PULL,8U,SIP9	10K
R477			
VR50-57	3228067300	VR,ROT,HOR,1U,L20,20K,A	20KA
C68	3408222271	CAP,E,SM,SG,85C,2200uF,50V,M,18P	2200/50
C837	3408247169	CAP,E,SM,SG,85C,470uF,35V,M,10x20	470/35
C24 C26 C28	3409210071-T	CAP,E,SM,SG,85C,10uF,50V,M,5P,TA	10/50
C30-32 C34 C36			
C38 C40 C93-94			
C478 C502 C603			
C606 C614 C647			
C650 C657 C665			
C668 C675 C683			
C686 C693 C701			
C704 C711 C719			
C722 C729 C737			
C740 C747 C755			
C758 C765 C860			
C1-10 C608	3409222071-T	CAP,E,SM,SG,85C,22uF,50V,M,5P,TA	22/50
C616-617 C620			
C652 C659-660			
C663 C670			
C677-678 C681			
C688 C695-696			
C699 C706			
C713-714 C717			
C724 C731-732			
C735 C742			
C749-750 C753			
C760 C767-768			
C771 C797 C799			
C801 C803 C805			
C807 C809 C811			
C835 C840-842			
C863			
C43-45 C58 C61	3409222141-T	CAP,E,SM,SG,85C,220uF,25V,J,8P,TA	220/25
C65			
C55	3409222171-T	CAP,E,SM,SG,85C,220uF,50V,M,10P,TA	220/50
C95 C289 C865	3409247071-T	CAP,E,SM,SG,85C,47uF,50V,M,6P,TA	47/50
C23 C25 C27	3409247971-T	CAP,E,SM,SG,85C,4.7uF,50V,M,5P,TA	4.7/50
C29 C33 C35			
C37 C39 C92			
C867			
C11-13 C15-16	3409247973-T	CAP,E,SM,SE,85C,4.7UF,50V,M,TA	4.7/50
C21 C41-42			
C838	3609104122-T	CAP,FILM,POLYESTR,SM,0.1uF,100V,J,TA	0.1/100(M)
C97	3609563120-T	CAP,FILM,POLYESTR,0.056uF,100V,J,TA	0.056/100(M)
X2	3938000964	X-TAL,8.000MHZ,30ppm,HC-49/S	8MHz
CN3	4350026500	CON ASS'Y,FL,12P,5264,BH0640,80MM	ASS'Y-12P
TER9	4408193009	TERMINAL,BLOCK(M),9P,3.81MM,AN	TERMINAL09P
JK9	4428592510	CON WAFER,BOX(M),10P,2/ST	TPH1419-10P
CN15	4428592520	CON WAFER,BOX(M),20P,2/ST	TPH1419-20P
CN2	4428592526	CON WAFER,BOX(M),26P,2/ST	TPH1419-26P
CN7	4428592530	CON WAFER,BOX(M),30P,2/ST	TPH1419-30P
CN5 CN1+6	4428592540	CON WAFER,BOX(M),40P,2/ST	TPH1419-40P
AN109	4428595002	CON WAFER,BOX(M),2P,ST	LW5267-02P
CN4	4428595009	CON WAFER,BOX(M),9P,ST	LW5267-09P
CN13	4428595010	CON WAFER,BOX(M),10P,ST	LW5267-10P
JK1-8	4438095310	JACK,RCA,2U,2P,2/AN	RCA02P
JK102	4438191900	JACK,DSUB(M),1U,25P,2/AN	D-SUB25P
JK101	4438191910	JACK,DSUB(F),1U,25P,ST	D-SUB25P(F)
SW111	4628981610	SW,SLIDE,HOR,DPDT,S,L6	JSS-2208A
RLY1-2	5528099410	RELAY,DPDT,5V,1A,125VAC,ATQ209 5V	5V
Q2-9	S20560240001	TR,SG,NPN,150mA,50V,2SC4081Y,SC-70,TA	2SC4081
IC98 IC125-132	S2110001000	IC,MUX,8:1,DG408DYZ,SOIC16	DG408DYZ

Ref.	Part No.	Description	Value
IC138			
IC20	S2110001100	IC,REC/PLAY,APR9600,SOP28	APR 9600
IC23-24	S2110001200	IC,OP AMP,QUAD,LM324MT,TSSOP 14P	LM324
IC1-4 IC10-19	S2110108000 2	IC,OP AMP,NJM2068M,SOP8	NJM2068M
IC21-22 IC66			
IC133-136			
IC139			
IC160	S2120001000	IC,MCU,ATMEL,AT89S52,TQFP44	AT89S52
IC86	S2122524001	IC,DEMUX,74HC154,SOP24	74HC154D
IC7-9	S2125010770 1	IC,AND GATE,74HC08,SOP14	74HC08
IC148	S2125070480 1	IC,NAND GATE,74HC00,SOP14	74HC00
IC97	S2128116960 1	IC,ADC,AD7819YR,SOP16	AD7819YR
IC89 IC96	S2130003400	IC,TRANSCEIVER,74HCT245,TSSOP20P	74HCT245
IC149-150			
IC203-204	S2150000400	IC,SW,QUAD SPST,ADG1311,TSSOP16P	ADG1311
IC25-26	S2150000500	IC,SW,QUAD SPST,ADG1312,TSSOP16P	ADG1312
IC201-202			
IC5-6 IC29	S2150000600	IC,D-FF,74HCT574,TSSOP20P	74HCT574
IC92-94 IC104			
IC137 IC146			
IC151-159	S2150000700	IC,SHIFT REGISTER,74HC595D,SOIC16	74HC595D
IC87	S2150000900	IC,RESET,DS1232LPu,u-SOP	DS1232LPU
IC144	S2170000200	IC,MELODY,CHIME&EM,HT86144,SOP28	HT86144
D21 D49	S2210050000 1	DIODE,SW,200mA,100V,MMBD4148,SOT-23,TA	1N4148
D1-20 D22-35	S2240050500 1	DIODE,SW,0.1A,85V,KDS226,SOT-23,TA	KDS226
L2-3	S2610331299 0	COIL,FER,RADIAL,330uH,TA	330uH
R169 R171	S3010000712 1	RES,TF,0,1/16W,0.05,1608	0
R1 R4-24	S3010100712 1	RES,TF,10,1/16W,5%,1608	10
R30-72 R74			
R104-109			
R318-319			
R469-476			
R511-516			
R541 R552 R558	S3010101712 1	RES,TF,100,1/16W,5%,1608	100
R592 R598 R604			
R610 R616 R622			
R628 R634 R640			
R646 R652 R658			
R664 R670 R725			
R81-82 R92	S3010102712 1	RES,TF,1K,1/16W,5%,1608	1K
R146 R155-168			
R547 R550 R563			
R566-567			
R570-571			
R574-575			
R578-579			
R582-583			
R586-587 R590			
R723 R728-729			
R27 R100-103	S3010103712 1	RES,TF,10K,1/16W,5%,1608	10K
R115 R117 R119			
R121 R124-127			
R131 R133 R135			
R137 R170 R557			
R560 R597 R600			
R609 R612 R621			
R624 R633 R636			
R645 R648 R657			
R660 R669 R672			
R675 R677 R679			
R681 R683 R685			
R687 R689			
R694-695			
R88 R551 R591	S3010104712 1	RES,TF,100K,1/16W,5%,1608	100K
R603 R615 R627			
R639 R651 R663			
R724 R726			
R730-731			
R559 R599 R611	S3010123712 1	RES,TF,12K,1/16W,5%,1608	12K
R623 R635 R647			
R659 R671			
R116 R118 R120	S3010184712 1	RES,TF,180K,1/16W,5%,1608	180K
R122 R132 R134			
R136 R138			
R553-554	S3010203712 1	RES,TF,20K,1/16W,5%,1608	20K

Ref.	Part No.	Description	Value
R593-594			
R605-606			
R617-618			
R629-630			
R641-642			
R653-654			
R665-666 R719			
R676 R678 R680	S3010223723 1	RES,TF,22K,1/10W,5%,2012	22K
R682 R684 R686			
R688 R690			
R720	S3010224712 1	RES,TF,220K,1/16W,5%,1608	220K
R869	S3010243712 1	RES,TF,24K,1/16W,5%,1608	24K
R721	S3010303712 1	RES,TF,30K,1/16W,5%,1608	30K
R99 R112-114	S3010334712 1	RES,TF,330K,1/16W,5%,1608	330K
R123 R128-130			
R691	S3010392712 1	RES,TF,3.9K,1/16W,5%,1608	3.9K
R83-85 R87	S3010471712 1	RES,TF,470,1/16W,5%,1608	470
R94-97 R561			
R601 R613 R625			
R637 R649 R661			
R673			
R89-91 R93	S3010472712 1	RES,TF,4.7K,1/16W,5%,1608	4.7K
R692			
R86 R228	S3010473712 1	RES,TF,47K,1/16W,5%,1608	47K
R548-549			
R564-565			
R568-569			
R572-573			
R576-577			
R580-581			
R584-585			
R588-589			
R556 R596 R608	S3010512712 1	RES,TF,5.1K,1/16W,5%,1608	5.1K
R620 R632 R644			
R656 R668			
R110	S3010561712 1	RES,TF,560,1/16W,5%,1608	560
R555 R595 R607	S3010562712 1	RES,TF,5.6K,1/16W,5%,1608	5.6K
R619 R631 R643			
R655 R667			
R98 R111	S3010563712 1	RES,TF,56K,1/16W,5%,1608	56K
R147-154	S3010682712 1	RES,TF,6.8K,1/16W,5%,1608	6.8K
R727	S3010821712 1	RES,TF,820,1/16W,5%,1608	820
R693	S3082708150	RES,TF,2.7,1/16W,5%,1608	2.7
C601-602	S3510102432 1	CAP,CE,MONO,X7R,1000pF,50V,J,1608,TA	0.001U
C622-623			
C625-626			
C628-629			
C631-632			
C634-635			
C637-638			
C640-641			
C14 C17-20	S3510104532 1	CAP,CE,MONO,X7R,0.1uF,50V,Z,1608,TA	0.1U
C48-49 C59-60			
C64 C66 C69-70			
C72-74 C77			
C85-86 C91			
C105 C126-134			
C234 C296			
C475-477 C479			
C488 C497 C499			
C501 C503 C609			
C624 C627 C630			
C633 C636 C639			
C642-646			
C773-788			
C829-830 C839			
C861 C864 C866			
C868			
C604 C619 C648	S3560101243 0	CAP,CE,MONO,COG,100PF,50V,J,1608,TA	100P
C662 C666 C680			
C684 C698 C702			
C716 C720 C734			
C738 C752 C756			
C770 C832 C862			
C46-47	S3560220243 0	CAP,CE,MONO,COG,22PF,50V,J,1608,TA	22P

Ref.	Part No.	Description	Value
C22 C96 C607	S3560470243 0	CAP,CE,MONO,COG,47PF,50V,J,1608,TA	47P
C615 C651 C658			
C669 C676 C687			
C694 C705 C712			
C723 C730 C741			
C748 C759 C766			
C798 C800 C802			
C804 C806 C808			
C810 C812			
X1	S3930000300	X-TAL,,11.0592MHZ,30PPM,20PF,HC49/S	11.0592MHz
D36-48	S5410050152 0	SURGE PROTECTION,50W,15KV,PG05FBESC,KEC	PG05FBESC
DSUB B'D 4000001910			
AN9	4428592526	CON WAFER,BOX(M),26P,2/ST	TPH1419-26P
JK10	4438191910	JACK,DSUB(F),1U,25P,ST	D-SUB25P
LED B'D 4000001920			
LD2 LD4-6 LD8 LD10 LD12 LD14	2300017010	LED,RND,3.1MM,BLU,CLR,1U,ST2.5	LTL1CHTBK1
AN4	4350026600	CON ASS'Y,DS,9P,5264,35022,200MM	ASS'Y-02P
R139-145 R815	S3010152712 1	RES,TF,1.5K,1/16W,5%,1608	1.5K
OUTPUTB'D 4000007700			
Q1-10	2008606998-T	TR,SG,NPN,300mA,20V,KTD1302,TO-92,TA	KTD1302
R95-100 R738	3039100575-T	RES,MF,10,2W,5%,RA R,TA	10 2W
R870			
R510	3039470575-T	RES,MF,47,2W,5%,RA R,TA	47 2W
VR1-16	3228067310	VR,ROT,HOR,1U,L20,100K,B	100KB CC
C123-124	3409210071-T	CAP,E,SM,SG,85C,10uF,50V,M,5P,TA	10/50
C146-147			
C160-161 C176			
C223 C304 C319			
C341-342			
C368-369			
C381-382			
C394-395			
C303 C305-306	3409210971-T	CAP,E,SM,SG,85C,1uF,50V,M,5P,TA	1/50
C308-309 C318			
C320-321			
C323-324			
C11-12 C50	3409222071-T	CAP,E,SM,SG,85C,22uF,50V,M,5P,TA	22/50
C87-90 C112			
C121 C137 C142			
C144 C150 C156			
C158 C164 C169			
C171 C244 C248			
C251 C255 C258			
C262 C265 C269			
C272 C276 C279			
C283 C286 C290			
C293 C297 C332			
C337 C339 C359			
C364 C366 C372			
C377 C379 C385			
C390 C392			
C579-580			
C245 C252 C259	3409247071-T	CAP,E,SM,SG,85C,47uF,50V,M,6P,TA	47/50
C266 C273 C280			
C287 C294			
C298 C300-302	3409247871-T	CAP,E,SM,SG,85C,0.47uF,50V,M,5P,2.5,TA	0.47/50
C313 C315-317			
C242 C249 C256	3409247971-T	CAP,E,SM,SG,85C,4.7uF,50V,M,5P,TA	4.7/50
C263 C270 C277			
C284 C291 C299			
C310-312 C314			
C325-327			
C53 C75	3609153120-T	CAP,FILM,POLYESTR,0.015uF,100V,J,TA	0.015/100(M)
C140-141			
C154-155			
C167-168			
C335-336			
C362-363			
C375-376			
C388-389			
C51 C138 C151	3609222120-T	CAP,FILM,POLYESTR,0.0022uF,100V,J,TA	2200P100(M)

Ref.	Part No.	Description	Value
C165 C333 C360			
C373 C386			
C18-20 C48-49	3609472120-T	CAP,FILM,POLYESTR,0.0047uF,100V,J,TA	4700P100(M)
C54-64			
TER1-8	4408193903	TERMINAL,BLOCK(M),3P,5.08MM,AN	TERMINAL03P
AN2 CN9	4428592526	CON WAFER,BOX(M),26P,2/ST	TPH1419-26P
AN5 CN10-11	4428592540	CON WAFER,BOX(M),40P,2/ST	TPH1419-40P
CN8	4428595009	CON WAFER,BOX(M),9P,ST	LW5267-09P
CN12	4428595016	CON WAFER,BOX(M),16P,ST	LW5267-16P
RLY1-8	5528099410	RELAY,DPDT,5V,1A,125VAC,ATQ209 5V	5V
BKT1-14	6505954310	BKT.PCB PS-M350	BRACKET
BK1-3	6505968010	BRACKET PCB PS-A152	BRACKET
IC11 IC38	S2110001000	IC,MUX,8:1,DG408DYZ,SOIC16	DG408DYZ
IC47-52			
IC12-16	S21101080002	IC,OP AMP,NJM2068M,SOP8	NJM2068M
IC22-24 IC35			
IC37 IC39-44			
IC53-60			
IC45-46	S2130004100	IC,VOLUME CTRL,NJW1184M,DMP20	NJM1184M
D1-26 D28-33	S22100500001	DIODE,SW,200mA,100V,MMBD4148,SOT-23,TA	1N4148
R508 R519 R522	S30100007230	RES,TF,0,1/10W,5%(J),2012	0
R525 R528 R544			
R722 R734			
R232 R242 R253	S30101027231	RES,TF,1K,1/10W,5%,2012	1K
R264 R275 R286			
R297 R308			
R5-6 R327 R330	S30101037231	RES,TF,10K,1/10W,5%,2012	10K
R332-334 R369			
R373-376 R383			
R387-390 R397			
R401-404 R411			
R415-418 R425			
R429-432 R439			
R443-446 R453			
R457-460			
R331 R372 R386	S30101057231	RES,TF,1M,1/10W,5%,2012	1M
R400 R414 R428			
R442 R456			
R229 R235 R251	S30101537231	RES,TF,15K,1/10W,5%,2012	15K
R262 R273 R284			
R295 R306 R323			
R365 R379 R393			
R407 R421 R435			
R449			
R317 R320-322	S30102037231	RES,TF,20K,1/10W,5%,2012	20K
R328-329			
R337-364			
R370-371			
R384-385			
R398-399			
R412-413			
R426-427			
R440-441			
R454-455			
R506-507 R509			
R518 R520-521			
R523-524			
R526-527			
R542-543			
R545-546			
R732-733			
R237 R246 R257	S30102247231	RES,TF,220K,1/10W,5%,2012	220K
R268 R279 R290			
R301 R312			
R239 R248 R259	S30102437231	RES,TF,24K,1/10W,5%,2012	24K
R270 R281 R292			
R303 R314			
R238 R247 R258	S30103027231	RES,TF,3K,1/10W,5%,2012	3K
R269 R280 R291			
R302 R313			
R230 R241 R252	S30103037231	RES,TF,30K,1/10W,5%,2012	30K
R263 R274 R285			
R296 R307			
R240 R249 R260	S30104717231	RES,TF,470,1/10W,5%,2012	470
R271 R282 R293			

Ref.	Part No.	Description	Value
R304 R315			
R326 R368 R382	S30104727231	RES,TF,4.7K,1/10W,5%,2012	4.7K
R396 R410 R424			
R438 R452			
R236 R245 R256	S30104737231	RES,TF,47K,1/10W,5%,2012	47K
R267 R278 R289			
R300 R311			
R233 R243 R254	S30105627231	RES,TF,5.6K,1/10W,5%,2012	5.6K
R265 R276 R287			
R298 R309			
R325 R367 R381	S30106827231	RES,TF,6.8K,1/10W,5%,2012	6.8K
R395 R409 R423			
R437 R451			
R234 R244 R255	S30106837231	RES,TF,68K,1/10W,5%,2012	68K
R266 R277 R288			
R299 R310			
R335-336	S30107507231	RES,TF,75,1/10W,5%,2012	75
R377-378			
R391-392			
R405-406			
R419-420			
R433-434			
R447-448			
R461-462 R735			
R737 R739 R741			
R743 R745 R747			
R749			
R324 R366 R380	S30108227231	RES,TF,8.2K,1/10W,5%,2012	8.2K
R394 R408 R422			
R436 R450			
R231 R250 R261	S30127505230	RES,TF,75K,1/10W,1%,2012	75K 1%
R272 R283 R294			
R305 R316			
C52 C139 C153	S35601012440	CAP,CE,MONO,COG,100PF,50V,J,2012,TA	100P
C166 C334 C361			
C374 C387			
C16 C120 C122	S35604702440	CAP,CE,MONO,COG,47PF,50V,J,2012,TA	47P
C136 C143 C145			
C149 C157 C159			
C163 C170 C172			
C243 C246 C250			
C253 C257 C260			
C264 C267 C271			
C274 C278 C281			
C285 C288 C292			
C295 C331 C338			
C340 C358 C365			
C367 C371 C378			
C380 C384 C391			
C393			
C307 C322	S35611032540	CAP,CE,MONO,X7R,0.01UF,50V,K,2012,TA	0.01U
C328-329	S35611042540	CAP,CE,MONO,X7R,0.1UF,50V,K,2012,TA	0.1U
C343-356			
D47-62	S54100501520	SURGE PROTECTION,50W,15KV,PG05FBESC,KEC	PG05FBESC
REMOTE B'D 4000007710			
VR20-23	3228067300	VR,ROT,HOR,1U,L20,20K,A	20KA
C6-7 C28-29	3409210071-T	CAP,E,SM,SG,85C,10uF,50V,M,5P,TA	10/50
C40-41			
C116-117 C175			
C177-178			
C182-184			
C188-190			
C194-196			
C200-202			
C206-208			
C212-214			
C218-220			
C5 C10 C21-22	3409222071-T	CAP,E,SM,SG,85C,22uF,50V,M,5P,TA	22/50
C27 C32-34 C39			
C44-46 C119			
C174 C533-534			
C555-562			
JK11-18	4408193608	MODULAR PLUG 8P	MODULAR08P
JK21-24			

Ref.	Part No.	Description	Value
AN7	4428592530	CON WAFER,BOX(M),30P,2/ST	TPH1419-30P
AN10-11	4428592540	CON WAFER,BOX(M),40P,2/ST	TPH1419-40P
S2	4628981610	SW,SLIDE,HOR,DPDT,S,L6	JSS-2208A
SW15	4698099210	SW DIP YD-03ZA	YD-03ZA
BKT1-14	6505954310	BKT.PCB PS-M350	Bracket
BK1-3	6505968010	BRACKET PCB PS-A152	Bracket
IC31-34	S21101080002	IC,OP AMP,NJM2068M,SOP8	NJM2068M
IC1-4	S21101083204	IC,OP AMP,NJM5532M,DMP8	NJM5532M
IC100-102	S21221164801	IC,DRIVER,RS422,DS3487,SOP16	DS3487M
IC5-7	S21221164802	IC,RECEIVER,RS422/423,DS3486M,SOP16	DS3486M
D35-46	S22100500001	DIODE,SW,200mA,100V,MMBD4148,SOT-23,TA	1N4148
R118 R128 R149	S30100007230	RES,TF,0,1/10W,5%(J),2012	0
R168 R176 R184			
R192 R200 R208			
R216 R224 R468			
R49-72 R86-94	S30101017231	RES,TF,100,1/10W,5%,2012	100
R102-111			
R113-117			
R124-126			
R140-147			
R159-163 R228			
R318-319			
R463-465 R467			
R469 R497-504			
R662 R674 R736			
R871-883			
R122-123	S30101037231	RES,TF,10K,1/10W,5%,2012	10K
R129-130			
R134-135 R150			
R153-154			
R164-166			
R171-174			
R179-182			
R187-190			
R195-198			
R203-206			
R211-214			
R219-222 R227			
R486 R491-492			
R2-3 R9-20 R47	S30101047231	RES,TF,100K,1/10W,5%,2012	100K
R74 R112			
R137-139			
R156-158			
R494-496			
R119 R127 R148	S30101057231	RES,TF,1M,1/10W,5%,2012	1M
R169 R177 R185			
R193 R201 R209			
R217 R225 R466			
R131 R136 R155	S30101837231	RES,TF,18K,1/10W,5%,2012	18K
R493			
R120-121	S30104727231	RES,TF,4.7K,1/10W,5%,2012	4.7K
R132-133			
R151-152 R488			
R490			
R21-45 R167	S30104737231	RES,TF,47K,1/10W,5%,2012	47K
R170 R175 R178			
R183 R186 R191			
R194 R199 R202			
R207 R210 R215			
R218 R223 R226			
C3-4 C9 C23	S35604702440	CAP,CE,MONO,COG,47PF,50V,J,2012,TA	47P
C26 C31 C35			
C38 C43 C47			
C118 C125			
C173 C180-181	S35604712440	CAP,CE,MONO,COG,470PF,50V,J,2012,TA	470P
C186-187			
C192-193			
C198-199			
C204-205			
C210-211			
C216-217 C222			
C1-2 C8 C24-25	S35611032540	CAP,CE,MONO,X7R,0.01UF,50V,K,2012,TA	0.01U
C30 C36-37 C42			
C113-115			
C13 C15 C17	S35611042540	CAP,CE,MONO,X7R,0.1UF,50V,K,2012,TA	0.1U

Ref.	Part No.	Description	Value
C179 C185 C191			
C197 C203 C209			
C215 C221			
C490-492			
PAGING B'D 4000007720			
Q12	2008606105-T	TR,SG,PNP,150mA,50V,KTA1266Y,TO-92,TA	KTA1266-Y
Q11	2008606110-T	TR,SW,NPN,100mA,50V,KRC107M,TO-92M,TA	KRC107M
D27	2058502220	DIODE,ZN,500MW,BM,22V,DO-35,TA	22BM
R709	3039101575-T	RES,MF,100,2W,5%,RA R,TA	100 2W
VR18-19	3228065900	VR,ROT,HOR,1U,L22.5,50K,B,CC	50KB CC
VR17	3228065910	VR,ROT,HOR,1U,BUSH,L22.5,10K,A	10KA
C848	3408233171	CAP,E,SM,SG,85C,330uF,50V,M,13P	330/50
C76 C849-851	3409222071-T	CAP,E,SM,SG,85C,22uF,50V,M,5P,TA	22/50
C855-856 C859			
C846	3409247071-T	CAP,E,SM,SG,85C,47uF,50V,M,6P,TA	47/50
C537	3409247971-T	CAP,E,SM,SG,85C,4.7uF,50V,M,5P,TA	4.7/50
C844-845	3409710070-T	CAP,E,NP,NP,85C,10uF,50V,M,5x11,TA	10/50 NP
C79-80	3609153120-T	CAP,FILM,POLYESTR,0.015uF,100V,J,TA	0.015/100(M)
C82	3609222120-T	CAP,FILM,POLYESTR,0.0022uF,100V,J,TA	2200P100(M)
LC1-2	3908609970	FILTER,EMI,DS56NZ82A103Q55B	10000pF
AN12	4355727407	CON ASSY,FL,16P,5395,5264,250mm	ASSY-16P
AN13	4355800901	CON ASSY,FL,10P,5264,BH0640,80mm	ASSY-10P
JK26	4438097310	JACK,PHONE,1U,4P,AN	PHONE04P
RLY9	5528099410	RELAY,DPDT,5V,1A,125VAC,ATQ209 5V	5V
BKT1-14	6505954310	BKT.PCB PS-M350	Bracket
BK1-3	6505968010	BRACKET PCB PS-A152	Bracket
IC19 IC142	S21101080002	IC,OP AMP,NJM2068M,SOP8	NJM2068M
IC67	S21101083204	IC,OP AMP,NJM5532M,DMP8	NJM5532M
D34	S22100500001	DIODE,SW,200mA,100V,MMBD4148,SOT-23,TA	1N4148
R699	S30100007230	RES,TF,0,1/10W,5%(J),2012	0
R78-85 R101	S30101017231	RES,TF,100,1/10W,5%,2012	100
R602			
R1 R77 R712	S30101037231	RES,TF,10K,1/10W,5%,2012	10K
R716			
R46 R472 R562	S30101047231	RES,TF,100K,1/10W,5%,2012	100K
R698 R702 R713			
R700 R710	S30101057231	RES,TF,1M,1/10W,5%,2012	1M
R470	S30101817230	RES,TF,180,1/10W,5%,2012	180
R701	S30101837231	RES,TF,18K,1/10W,5%,2012	18K
R75-76	S30102037231	RES,TF,20K,1/10W,5%,2012	20K
R73 R717	S30103327231	RES,TF,3.3K,1/10W,5%,2012	3.3K
R703-704	S30104717231	RES,TF,470,1/10W,5%,2012	470
R4 R696	S30104727231	RES,TF,4.7K,1/10W,5%,2012	4.7K
R707-708 R714			
R7 R705-706	S30104737231	RES,TF,47K,1/10W,5%,2012	47K
R711	S30105627231	RES,TF,5.6K,1/10W,5%,2012	5.6K
R471	S30106817231	RES,TF,680,1/10W,5%,2012	680
R8 R697 R715	S30106827231	RES,TF,6.8K,1/10W,5%,2012	6.8K
C81	S35601012440	CAP,CE,MONO,COG,100PF,50V,J,2012,TA	100P
C412 C538 C847	S35604702440	CAP,CE,MONO,COG,47PF,50V,J,2012,TA	47P
C854 C857			
C14	S35604712440	CAP,CE,MONO,COG,470PF,50V,J,2012,TA	470P
C83 C843	S35611032540	CAP,CE,MONO,X7R,0.01UF,50V,K,2012,TA	0.01U
C84	S35611042540	CAP,CE,MONO,X7R,0.1UF,50V,K,2012,TA	0.1U
FRONT B'D 4000007600			
IC28 IC30	2118031108	IC,DRIVER,LED METER,LB1403N-E,SIP9	LB1403N
IC61-65 IC110			
LED1	2300030100	LED,RND 3.1MM,RED,DIF,1U,ST2.5	LTL-1CHE
LED2	2300032100	LED,RND 3.1MM,GRN,DIF,1U,ST2.5	LTL-1CHG
SEG01-09	2330000300	LED SEGMENT,1U,RED,CC,7.4*10,B5-C284RD-B	B5-C284RD-B
VR27	3228067210	VR,ROT,VER,1U,L15,20K,A	20KA
VR25 VR43-49	3230000500	VR,SLIDE,VER,1U,T45,L10,50K,B	50KB
AN8	4350026601	CON ASSY,DS,9P,5264,35022,320MM	ASSY-09P
AN6	4420001600	CON WAFER,PIN(M),16P,2.54mm,2/ST	A33B-16P
AN15	4420001700	CON WAFER,PIN(M),20P,2.54mm,2/ST	A33B-20P
AN1	4420004200	CON WAFER,BOX(M),26P,2.54mm,2/ST	A33B-26P
SW1-2 SW11-12	4658099912	SWITCH TACT ITL-01GK	SW TACT ITL-01GK
SW5-10 SW3-4			
SW13 SW16			
TSW1-8	4658099913	SW,TACT,VER,BLACK	ITL-02GKR
TSW9-17	4658099913	SW,TACT,VER,BLACK	SW TACT
LED4-6 LED9-11	S2300000200	LED,SMD,GRN,CLR,1U,1608,TA	C191KGKT
LED14-16			

Ref.	Part No.	Description	Value
LED19-21			
LED24-26			
LED29-31			
LED34-36			
LED39-41			
LED8 LED13	S2300000300	LED,SMD,RED,CLR,1U,1608,TA	C191KRKT
LED18 LED23			
LED28 LED33			
LED38 LED43			
LED7 LED12	S2300000400	LED,SMD,YEL,CLR,1U,1608,TA	C191KSKT
LED17 LED22			
LED27 LED32			
LED37 LED42			
R756 R761 R766	S30100007230	RES,TF,0,1/10W,5%(J),2012	0
R771 R776 R781			
R786 R897			
R753 R758 R763	S30101037231	RES,TF,10K,1/10W,5%,2012	10K
R768 R773 R778			
R783 R894			
R754 R759 R764	S30103037231	RES,TF,30K,1/10W,5%,2012	30K
R769 R774 R779			
R784 R895			
R478-485	S30105647231	RES,TF,560K,1/10W,5%,2012	560K
R757 R762 R767	S30106807231	RES,TF,68,1/10W,5%,2012	68
R772 R777 R782			
R787 R898			
R755 R760 R765	S30109127231	RES,TF,9.1K,1/10W,5%,2012	9.1K
R770 R775 R780			
R785 R896			
C1-17	S34121000632	CAP,E,SM,RC,105C,10uF,25V,M,TA	10/25
C480-487	S35101024331	CAP,CE,MONO,COG,1000pF,50V,J,2012,TA	0.001U
C239 C396 C399	S35101045331	CAP,CE,MONO,X7R,0.1uF,50V,Z,2012,TA	0.1U
C402 C405 C408			
C411 C489 C793			
ASSY			
CON	4355784412	CON ASS'Y,DS,2P,5264,STRIP,250MM	
	4355880212	CON ASS'Y,DS,2P,187T08,VHR,250MM	
	4350026700	CON ASS'Y,RB,26P,IDC2.54,IDC2.54,100MM	
	4350026701	CON ASS'Y,RB,26P,IDC2.54,IDC2.54,170MM	
	4350026800	CON ASS'Y,RB,30P,IDC2.54,IDC2.54,130MM	
	4350029400	CON ASS'Y,RB,40P,DONCO,IDC2.54,260MM	
	4350029401	CON ASS'Y,RB,20P,DONCO,IDC2.54,260MM	
	4355726607	CON ASS'Y,RB,40P,IDC2.54,140MM	
SW	4628980210	SW,POWER,ROCKER,VER,SPST,3A,250V	
TRANS	2880000100	TRANS,SW,220~240VAC,24V,2A,PX-8000	R,C
	2880000101	TRANS,SW,100~120VAC,24V,2A, PX-8000	E
AC CORD	4308994910	AC CORD,3P,16A,250VAC,V,2500MM	R
	4300000800	AC CORD,3P,16A,250VAC,VDE,2.2M	R
	4308991210	AC CORD,3P,13A,250VAC,UK,1800MM	C
	4300000801	AC CORD,3P,13A,250VAC,UK,1.8M	C
	4308999900	AC CORD,3P,10A,125VAC,U/C,2200MM	E
	4300000802	AC CORD,3P,10A,125VAC,U/C,2.2M	E
	4308987050	AC CORD,3P,16A,250VAC,2200MM	D
	4300000803	AC CORD,3P,10A,250VAC,2.2M	D
SPK UNIT	5008984920	SPEAKER,UNIT,FULL,2",8OHM,1W,50SK076	

ELECTRICAL PARTS LIST (RM-8000)

Ref.	Part No.	Description	Value
MAIN B'D 4000007500			
Q1	2008606998-T	TR,SG,NPN,300mA,20V,KTD1302,TO-92,TA	KTD1302
D3	2058100964	DIODE,RE,1A,40V,1N5819,DO-41,TA	1N5819
D5	2058100996	DIODE,RE,1A,800V,1N4006,DO-41,TA	1N4006(4007)
Z3-6	2058502056	DIODE,ZN,500mW,BM,5.6V,DO-35,TA	5.6BM
Z2	2058502180	DIODE,ZN,500MW,BM,18V,DO-35,TA	18BM
IC6	2118080436	IC,POW AMP,5W/8ohm,LM384N,DIP14	LM384
IC20	2123320991	IC,MCU,AT89C2051-24PI,DIP20	89C2051
IC14	2128220600	IC,RESET,DS1232,DIP8	DS1232
IC5	2128840426	IC,DRIVER,LED METER,LM3914,DIP18	LM3914
IC19	2168640978	IC,SW REG,5V,1A,LM2575T-5,T05D	LM2575
R83	3029100475-T	RES,MF,10,1W,5%,RA R	10 1W
R47	3039220472-T	RES,MF,22,1W,5%,RA R,TA	22 1W
R91	3096103991	RES,ARY,10K,1/5W,5%,PULL,8U,SIP9	10K
VR1-2	3228067300	VR,ROT,HOR,1U,L20,20K,A	20KA
C56	3408233141	CAP,E,SM,SG,85C,330uF,25V,M,10P	330/25
C42 C61	3408247171	CAP,E,SM,SG,85C,470uF,50V,M,13P	470/50
C65			
C13 C22	3409210071-T	CAP,E,SM,SG,85C,10uF,50V,M,5P,TA	10/50
C32 C35			
C39			
C51-52	3409210171-T	CAP,E,SM,SG,85C,100uF,50V,M,8P,TA	100/50
C6-8 C10	3409222071-T	CAP,E,SM,SG,85C,22uF,50V,M,5P,TA	22/50
C12 C17			
C25-26			
C28-31			
C34 C36			
C38			
C19 C37	3409247071-T	CAP,E,SM,SG,85C,47uF,50V,M,6P,TA	47/50
C40			
C21 C63	3409247971-T	CAP,E,SM,SG,85C,4.7uF,50V,M,5P,TA	4.7/50
C2-3	3409710070-T	CAP,E,NP,NP,85C,10uF,50V,M,5x11,TA	10/50 NP
C43	3609104122-T	CAP,FILM,POLYESTR,SM,0.1uF,100V,J,TA	0.1/100(M)
X2	3938000964	X-TAL,8.000MHZ,30ppm,HC-49/S	8MHz
JK3	4408193608	MODULAR PLUG 8P	MODULAR08P
CN2	4418528126	CON WAFER,BOX(F),26P,1.25mm,ST	FE-BT-26P
CN3	4428533202	CON WAFER,LOCK(M),2P,AN	3951-02P
CN1	4428595005	CON WAFER,BOX(M),5P,ST	LW5267-05P
F1-2	4458999110	FUSE CLIP 5*20	CLIP 20mm
SW15	4698099210	SW DIP YD-03ZA	SW DIP YD-03ZA
IC1 IC3-4	S21101080002	IC,OP AMP,NJM2068M,SOP8	NJM2068M
IC21	S21251607701	IC,DEMUX,74HC138A,SOIC16	74HC138D
IC10 IC15	S21275087601	IC,TRANSCEIVER,SN75176BD,SOIC8	SN75176BD
IC9	S2130003400	IC,TRANSCEIVER,74HCT245,TSSOP20P	74HCT245
IC2	S2170000200	IC,MELODY,CHIME&EM,HT86144,SOP28	HT86144
D1-2	S22100500001	DIODE,SW,200mA,100V,MMBD4148,SOT-23,TA	1N4148
L1-3	S26103312990	COIL,FER,RADIAL,330uH,TA	330uH
R84-85	S30100007230	RES,TF,0,1/10W,5%(J),2012	0
R9 R23	S30101017231	RES,TF,100,1/10W,5%,2012	100
R94-95			
R20 R39	S30101027231	RES,TF,1K,1/10W,5%,2012	1K
R77 R87			
R8 R19	S30101037231	RES,TF,10K,1/10W,5%,2012	10K
R27 R33			
R36 R45			
R86			
R92-93			
R11-12	S30101047231	RES,TF,100K,1/10W,5%,2012	100K
R16-17			
R21-22			
R28			
R30-31			
R34-35			
R41-42			
R46			
R88-89			
R10	S30101137231	RES,TF,11K,1/10W,5%,2012	11K
R80-81	S30101217231	RES,TF,120,1/10W,5%,2012	120
R43	S30101227231	RES,TF,1.2K,1/10W,5%,2012	1.2K
R6	S30101237231	RES,TF,12K,1/10W,5%,2012	12K
R13 R59	S30101837231	RES,TF,18K,1/10W,5%,2012	18K
R60	S30102037231	RES,TF,20K,1/10W,5%,2012	20K
R25	S30102247231	RES,TF,220K,1/10W,5%,2012	220K
R32	S30102437231	RES,TF,24K,1/10W,5%,2012	24K

Ref.	Part No.	Description	Value
R61	S30102797231	RES,TF,2.7,1/10W,5%,2012	2.7
R24	S30103637230	RES,TF,36K,1/10W,5%,2012	36K
R44	S30103927231	RES,TF,3.9K,1/10W,5%,2012	3.9K
R40	S30103937231	RES,TF,39K,1/10W,5%,2012	39K
R4-5	S30104717231	RES,TF,470,1/10W,5%,2012	470
R18	S30104727231	RES,TF,4.7K,1/10W,5%,2012	4.7K
R78-79			
R7 R82	S30104737231	RES,TF,47K,1/10W,5%,2012	47K
R90	S30105627231	RES,TF,5.6K,1/10W,5%,2012	5.6K
R29	S30106837231	RES,TF,68K,1/10W,5%,2012	68K
R37-38	S30107517230	RES,TF,750,1/10W,5%,2012	750
R26	S30108217231	RES,TF,820,1/10W,5%,2012	820
C55 C57	S35101035039	CAP,CE,MONO,X7R,10n,63V,K,2012,TA	0.01/63
C18 C20	S35101045331	CAP,CE,MONO,X7R,0.1uF,50V,Z,2012,TA	0.1U
C23-24			
C41			
C47-50			
C53-54			
C58 C62			
C64 C66			
C493			
C14	S35601012440	CAP,CE,MONO,COG,100PF,50V,J,2012,TA	100P
C4-5	S35602202440	CAP,CE,MONO,COG,22PF,50V,J,2012,TA	22P
C59-60			
C9 C16	S35604702440	CAP,CE,MONO,COG,47PF,50V,J,2012,TA	47P
C27 C33			
X1	S3930000300	X-TAL,,11.0592MHZ,30PPM,20PF,HC49/S	11.0592MHz
IC13	S2150000600	IC,D-FF,74HCT574,TSSOP20P	74HCT574
KEY B'D 4000007510			
LED11	2300030100	LED,RND 3.1MM,RED,DIF,1U,ST2.5	LTL-1CHE
LED12-15	2300032100	LED,RND 3.1MM,GRN,DIF,1U,ST2.5	LTL-1CHG
LED16	2318999990	LED DISPLAY A43B/5G4YH	A43B/5G4YH
R76	3096103991	RES,ARY,10K,1/5W,5%,PULL,8U,SIP9	10K
AN2	4418528226	CON WAFER,BOX(F),26P,1.25mm,AN	FE-ST-26P
S1-10	4658098710	SW,TACT,VER,RED	JB15LRP2 RED
IC12	S2130003400	IC,TRANSCEIVER,74HCT245,TSSOP20P	74HCT245
R48-58	S30101827231	RES,TF,1.8K,1/10W,5%,2012	1.8K
R62-75	S30104717231	RES,TF,470,1/10W,5%,2012	470
C44-46	S35101045331	CAP,CE,MONO,X7R,0.1uF,50V,Z,2012,TA	0.1U
IC8 IC11	s2150000600	IC,D-FF,74HCT574,TSSOP20P	74HCT574
JACK B'D 4000007520			
AN1	4355721600	CON ASS'Y,SH,5P,5264,5395,240mm	ASS'Y-05P
Z1	2058502180	DIODE,ZN,500MW,BM,18V,DO-35,TA	18BM
R3	3039102575-T	RES,MF,1K,2W,5%,RA R,TA	1K 2W
C1	3408247169	CAP,E,SM,SG,85C,470uF,35V,M,10x20	470/35
EMF1-2	3908609970	FILTER,EMI,DSS6NZ82A103Q55B	10000pF
JK1	4430002200	JACK,XLR(F),1U,3p,AN,locking type	XLR/F
R14	S30100007230	RES,TF,0,1/10W,5%(J),2012	0
R15	S30101057231	RES,TF,1M,1/10W,5%,2012	1M
R1-2	S30104727231	RES,TF,4.7K,1/10W,5%,2012	4.7K
C11	S35101045331	CAP,CE,MONO,X7R,0.1uF,50V,Z,2012,TA	0.1U
ASS'Y			
	4115198240	CARD CABLE,FFC,26P,P1.25,PL/PL,100MM	
	4355721300	CON ASS'Y,DS,2P,VHR,STRIP,100MM	
	5008984920	SPEAKER,UNIT,FULL,2",8OHM,1W,50SK076	
	5508411939	FUSE,20MM,T,630MA,250V,K/U/CS	

ELECTRICAL PARTS LIST (LM-8000)

Ref.	Part No.	Description	Value
MAIN B'D 4000008600			
D1	2058100964	DIODE,RE,1A,40V,1N5819,DO-41,TA	1N5819
IC2	2168640978	IC,SW REG,5V,1A,LM2575T-5,T05D	LM2575
R45	3089100275	RES,FS,MF,10,1/4W,5%,RA R,TA	FR 10
C34	3409222071-T	CAP,E,SM,SG,85C,22uF,50V,M,5P,TA	22/50
C39	3409233147-T	CAP,E,SM,SD,85C,330uF,25V,M,8x11.5,TA	330/25
CN1	4355461901	CON ASS'Y 4P 50MM LM88A	ASS'Y-04P
JK3	4408193508	JACK,MODULAR,1U,8P,ST,RJ-45	MODULAR08P
CN5	4428536309	CON WAFER,LOCK(M),9P,2/AN	FMN-BTRK-09P
CN3	4428594010	CON WAFER,BOX(M),10P,2/ST	5532-10P
S3	4658098410	SWROTARY ENCODER EC11B15D1-ZZZ	EC11B15D1
R50	OPEN		open
IC8	S2120001000	IC,MCU,ATMEL,AT89S52,TQFP44	AT89S52
IC5-6	S21275087601	IC,TRANSCEIVER,SN75176BD,SOIC8	SN75176BD
IC12	S2150000900	IC,RESET,DS1232LPu,u-SOP	DS1232LPU
L1	S26103312990	COIL,FER,RADIAL,330uH,TA	330uH
R29	S30100007121	RES,TF,0,1/16W,0.05,1608	0
R27	S30101027121	RES,TF,1K,1/16W,5%,1608	1K
R49	S30101217121	RES,TF,120,1/16W,5%,1608	120
R1 R46-47	S30104737121	RES,TF,47K,1/16W,5%,1608	47K
C17 C32 C37 C40 C44 C46 C493	S3510104532 1	CAP,CE,MONO,X7R,0.1uF,50V,Z,1608,TA	0.1U
C30-31	S35601012430	CAP,CE,MONO,COG,100PF,50V,J,1608,TA	100P
C33 C45	S35602202430	CAP,CE,MONO,COG,22PF,50V,J,1608,TA	22P
X1	S3930000300	X-TAL,,11.0592MHZ,30PPM,20PF,HC49/S	11.0592MHz
DISPLAY B'D 4000008610			
SEG1	2330000400	LED SEGMENT,1U,RED,CA,7.4*10,BS-A284RD-B	BS-A284RD-B
CN2	4428593910	CON WAFER,BOX(M),10P,2/ST	5533-10P
S4	4658099912	SWITCH TACT ITL-01GK	ITL-01GK
R34-41	S30103317121	RES,TF,330,1/16W,5%,1608	330
JAC K B'D 4000008700			
VR1-2	3228067330	VR NOBLE VR XV09211NPP15A20K	20KA
C8 C16 C42	3409222071-T	CAP,E,SM,SG,85C,22uF,50V,M,5P,TA	22/50
C1-2 C7 C15 C26-27	3409247973-T	CAP,E,SM,SE,85C,4.7UF,50V,M,TA	4.7/50
C4 C10 C18-19 C29	3409710070-T00R	CAP,E,NP,NP,85C,10uF,50V,M,5x11,TA	10/50 NP
EMF1-2	3908609970	FILTER,EMI,DSS6NZ82A103Q55B	10000pF
AN1	4428595004	CON WAFER,BOX(M),4P,ST	LW5267-04P
JK4	4438097310	JACK,PHONE,1U,4P,AN	PHONE04P
JK1	4438098410	JACK,PHONE,MINI,1U,4P,AN	PHONE04P
IC7	S2110001200	IC,OP AMP,QUAD,LM324MT,TSSOP 14P	LM324
IC1	S21101080002	IC,OP AMP,NJM2068M,SOP8	NJM2068M
R9	S30100007121	RES,TF,0,1/16W,0.05,1608	0
R21-22	S30101017121	RES,TF,100,1/16W,5%,1608	100
R14	S30101027121	RES,TF,1K,1/16W,5%,1608	1K
R15 R23-26 R31	S30101037121	RES,TF,10K,1/16W,5%,1608	10K
R7-8 R11-12 R16-17	S30101047121	RES,TF,100K,1/16W,5%,1608	100K
R10	S30101057121	RES,TF,1M,1/16W,5%,1608	1M
R13	S30101227121	RES,TF,1.2K,1/16W,5%,1608	1.2K
R5	S30101237121	RES,TF,12K,1/16W,5%,1608	12K
R6	S30101837121	RES,TF,18K,1/16W,5%,1608	18K
R1-2 R32-33	S30104717121	RES,TF,470,1/16W,5%,1608	470
R18-20	S30104727121	RES,TF,4.7K,1/16W,5%,1608	4.7K
R3-4	S30104737121	RES,TF,47K,1/16W,5%,1608	47K
R28 R30 R42-43	S30106827121	RES,TF,6.8K,1/16W,5%,1608	6.8K
C11-12	S35101024321	CAP,CE,MONO,X7R,1000pF,50V,J,1608,TA	0.001U
C9 C13	S35101045321	CAP,CE,MONO,X7R,0.1uF,50V,Z,1608,TA	0.1U
C6	S35601512430	CAP,CE,MONO,COG,150PF,50V,J,1608,TA	150P
C3 C5 C14 C20	S35602202430	CAP,CE,MONO,COG,22PF,50V,J,1608,TA	22P
C22-23	S35602212430	CAP,CE,MONO,COG,220PF,50V,J,1608,TA	220P

TOP AND BOTTOM VIEW OF P.C.BOARD (PX-8000)

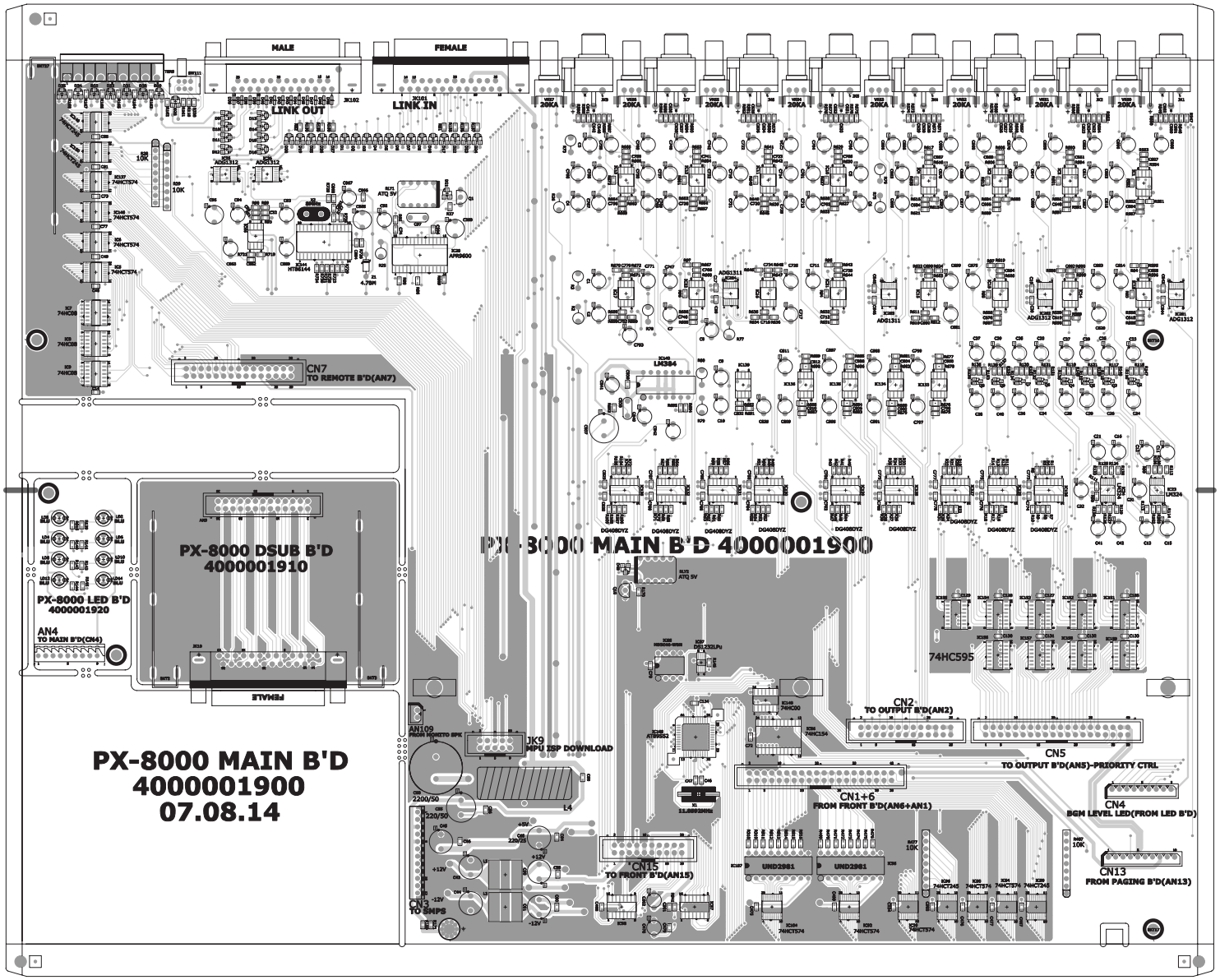

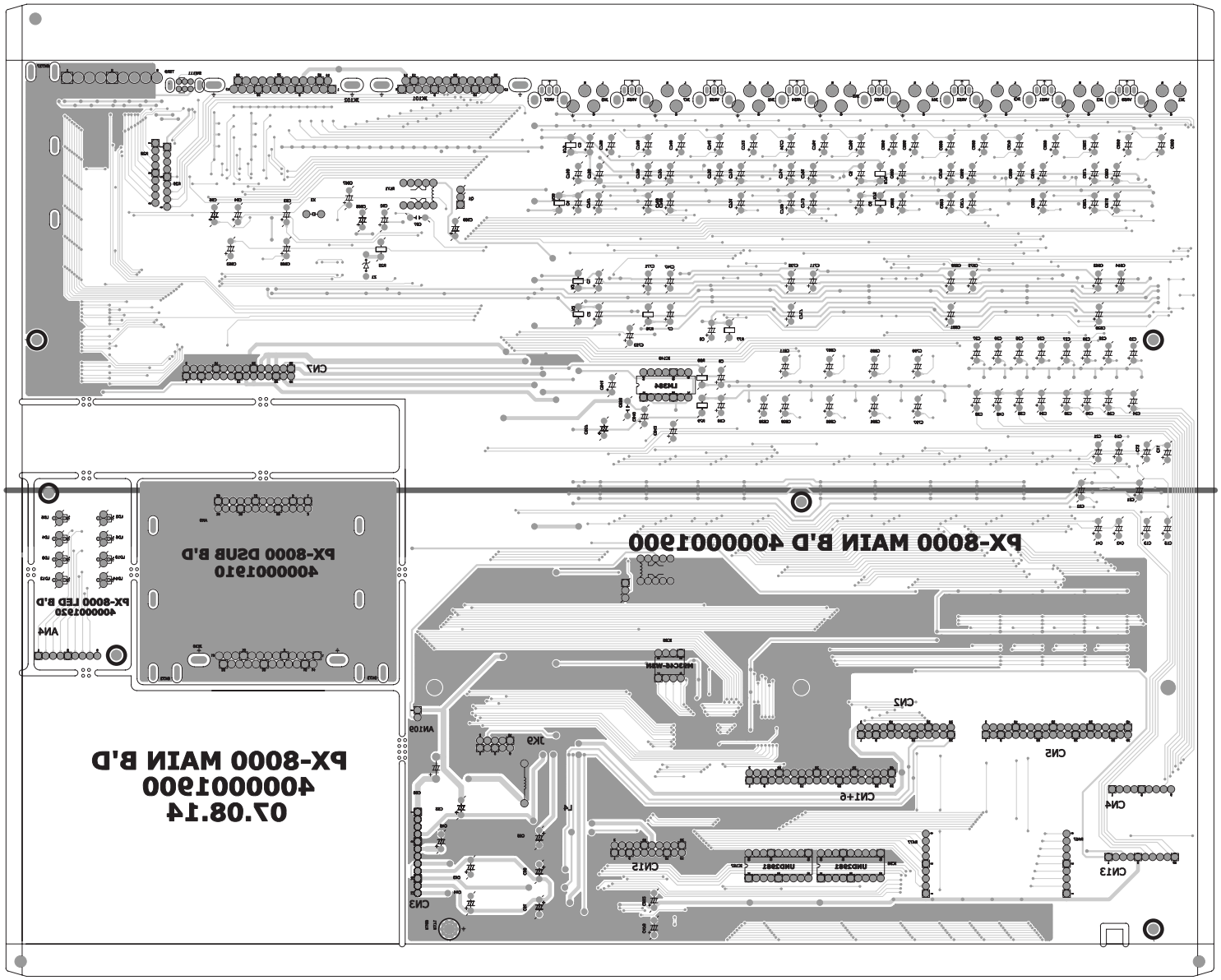
PX-8000 MAIN B'D
4000001900
07.08.14
PX-8000 MAIN B'D 4000001900
PX-8000 DSUB B'D
4000001910
PX-8000 LED B'D
4000001920
CN7
CN2
CN5
CN4
CN13
CN15
CN1+6
CN3
AN4
AN109
3K9
L4
LM8N
MIC3C4-MAIN
UM2982T
UM2982T

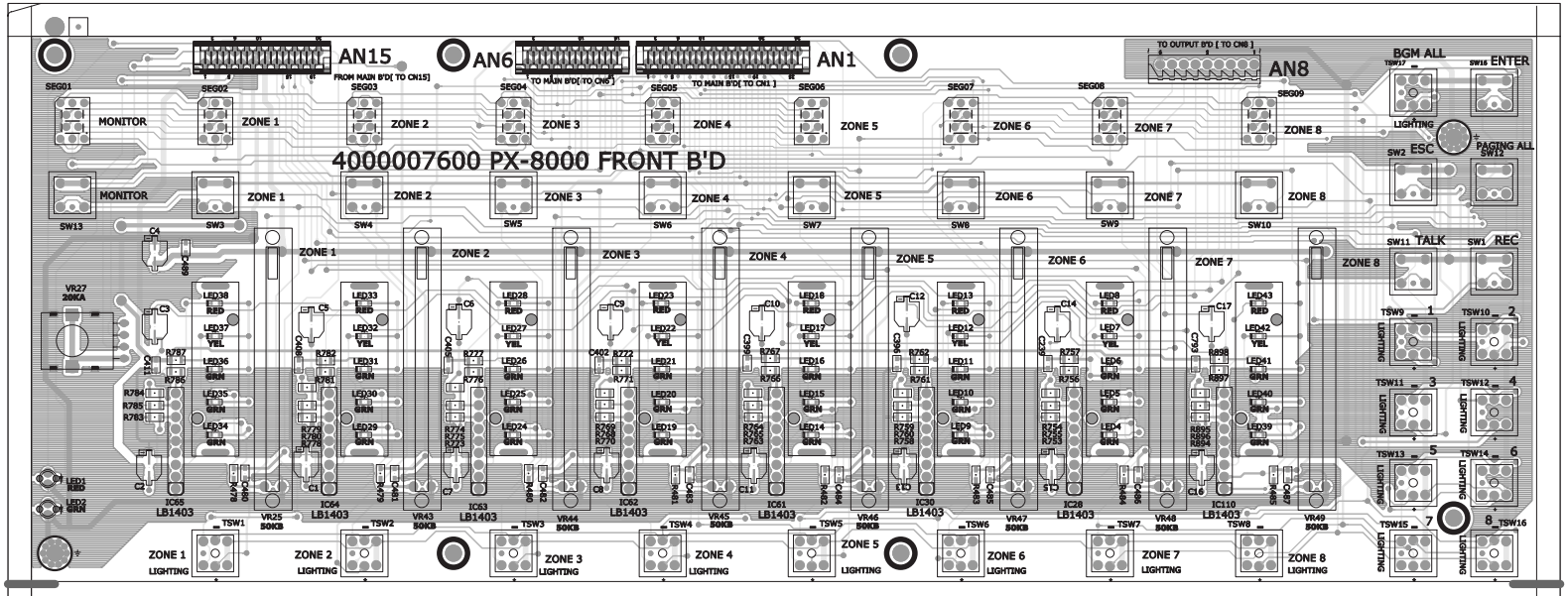

4000007600 PX-8000 FRONT B'D

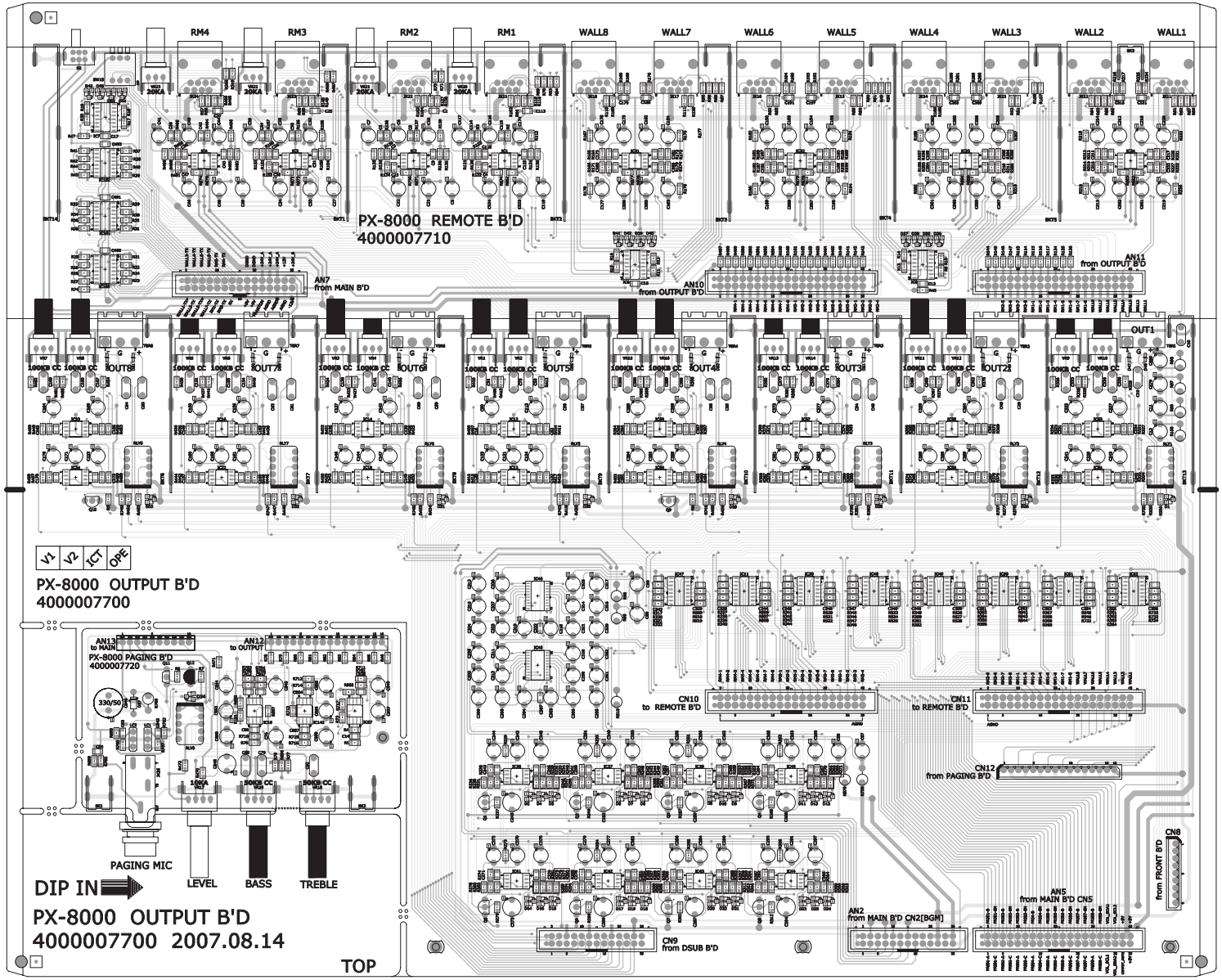
RM4
RM3
RM2
RM1
WALL8
WALL7
WALL6
WALL5
WALL4
WALL3
WALL2
WALL1
PX-8000 REMOTE B'D
4000007710
AN7
from MAIN B'D
AN10
from OUTPUT B'D
AN11
from OUTPUT B'D
OUT1
OUT8
OUT7
OUT6
OUT5
OUT4
OUT3
OUT2
V1
V2
ICT
OPE
PX-8000 OUTPUT B'D
4000007700
AN13
to MAIN
AN12
to OUTPUT
PX-8000 PAGING B'D
4000007720
330/50
PAGING MIC
LEVEL
BASS
TREBLE
DIP IN
PX-8000 OUTPUT B'D
4000007700 2007.08.14
TOP
CN10
to REMOTE B'D
CN11
to REMOTE B'D
CN12
from PAGING B'D
CN8
from FRONT B'D
AN5
from MAIN B'D CN5
AN2
from MAIN B'D CN2(BGM)
CN9
from DSUB B'D

TOP AND BOTTOM VIEW OF P.C.BOARD (LM-8000)

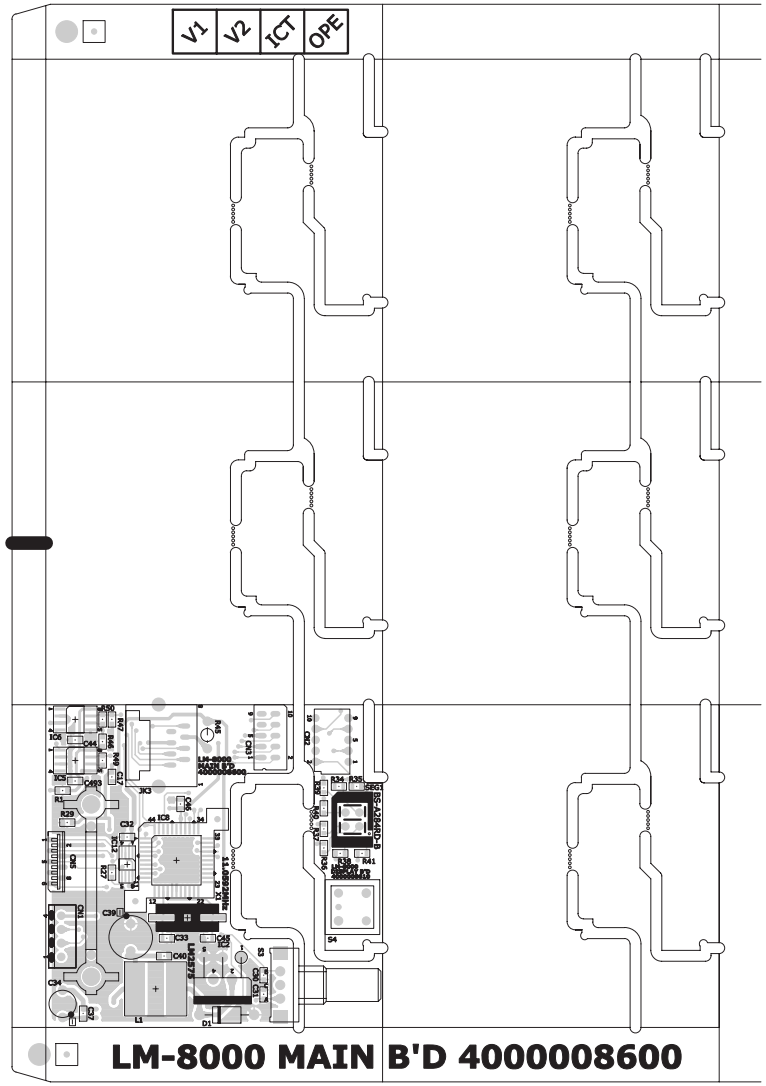

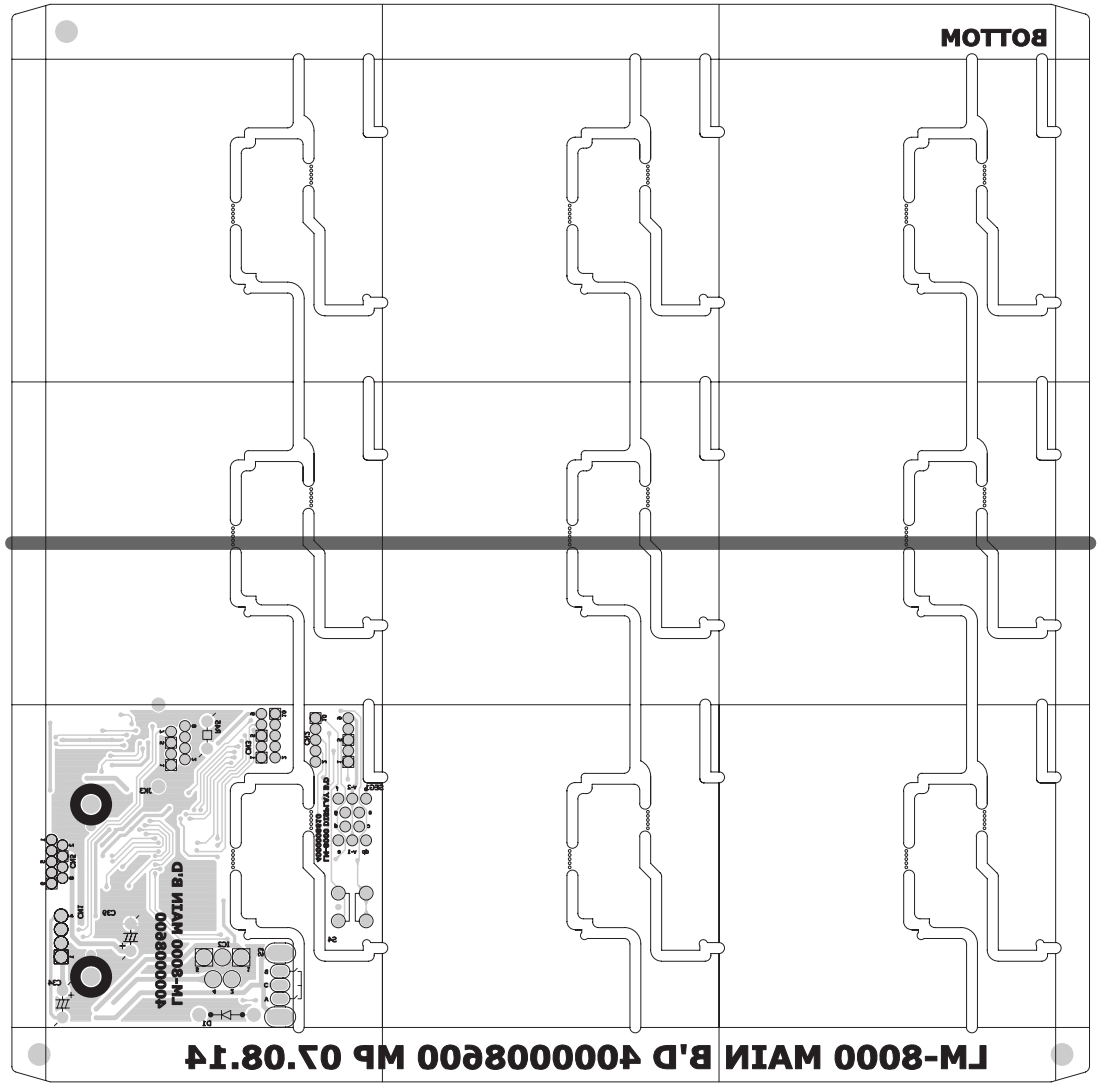

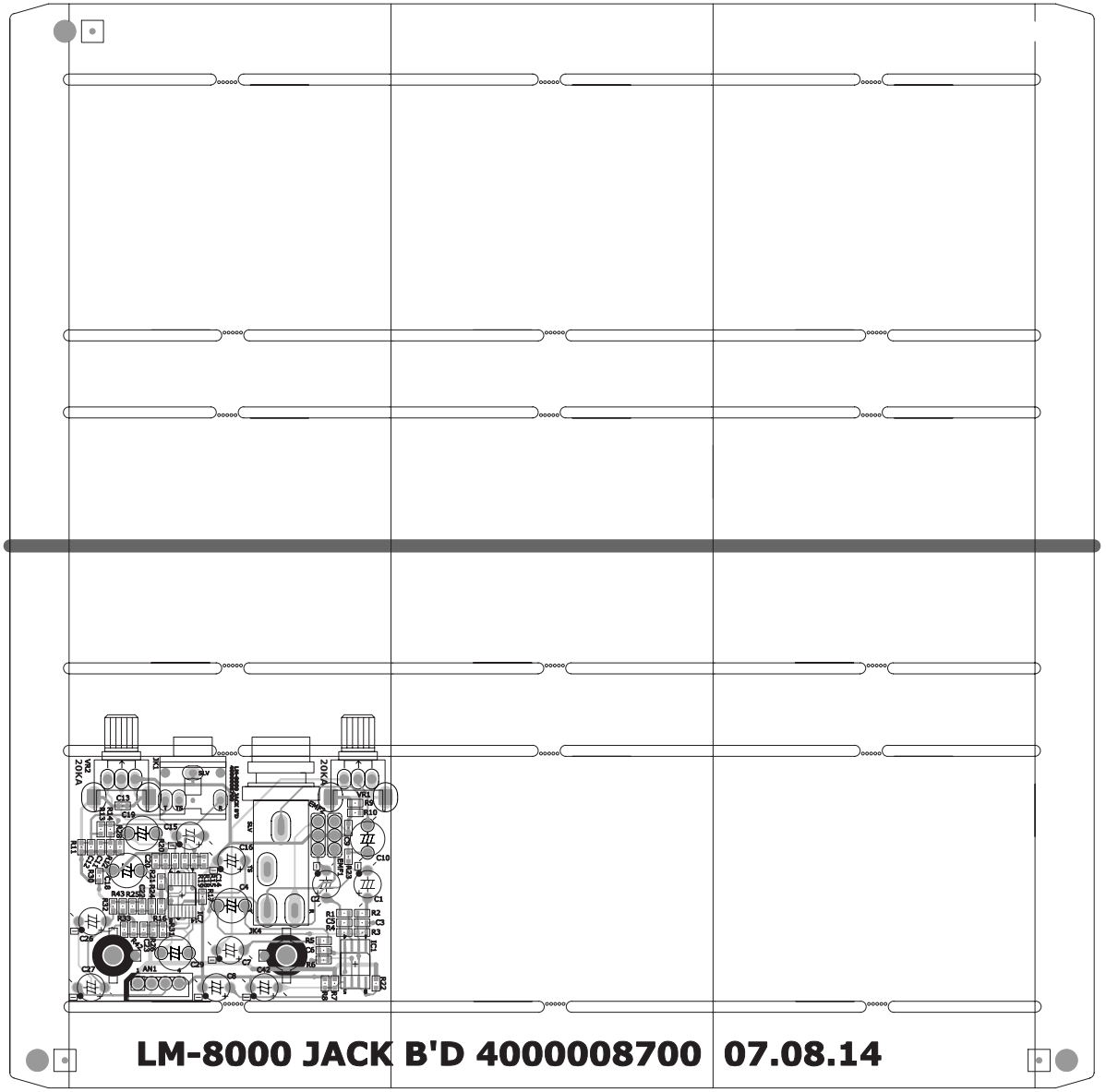
LM-8000 JACK B'D 4000008700 07.08.14

TOP AND BOTTOM VIEW OF P.C.BOARD (RM-8000)

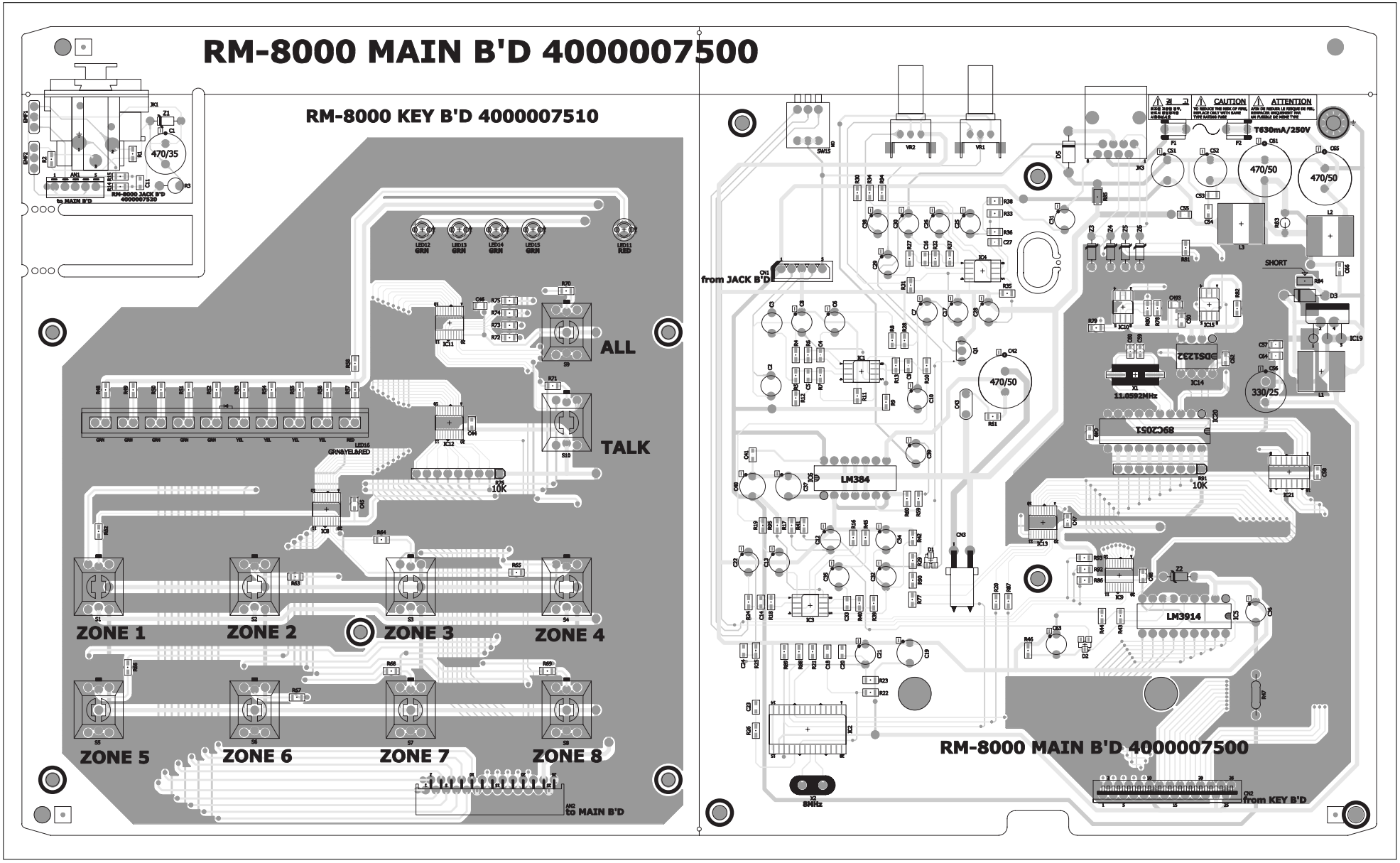

WIRING DIAGRAM

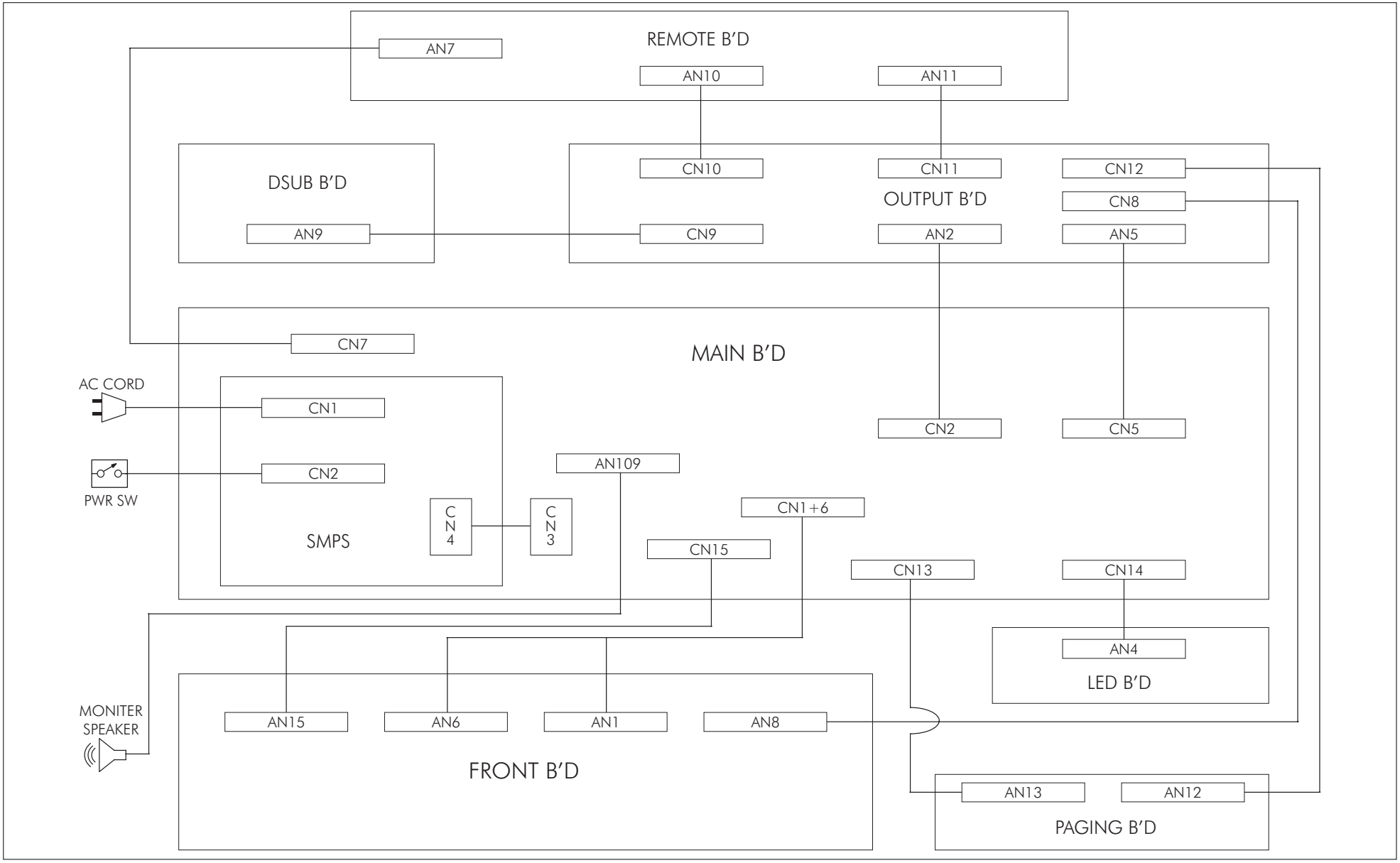

BLOCK DIAGRAM

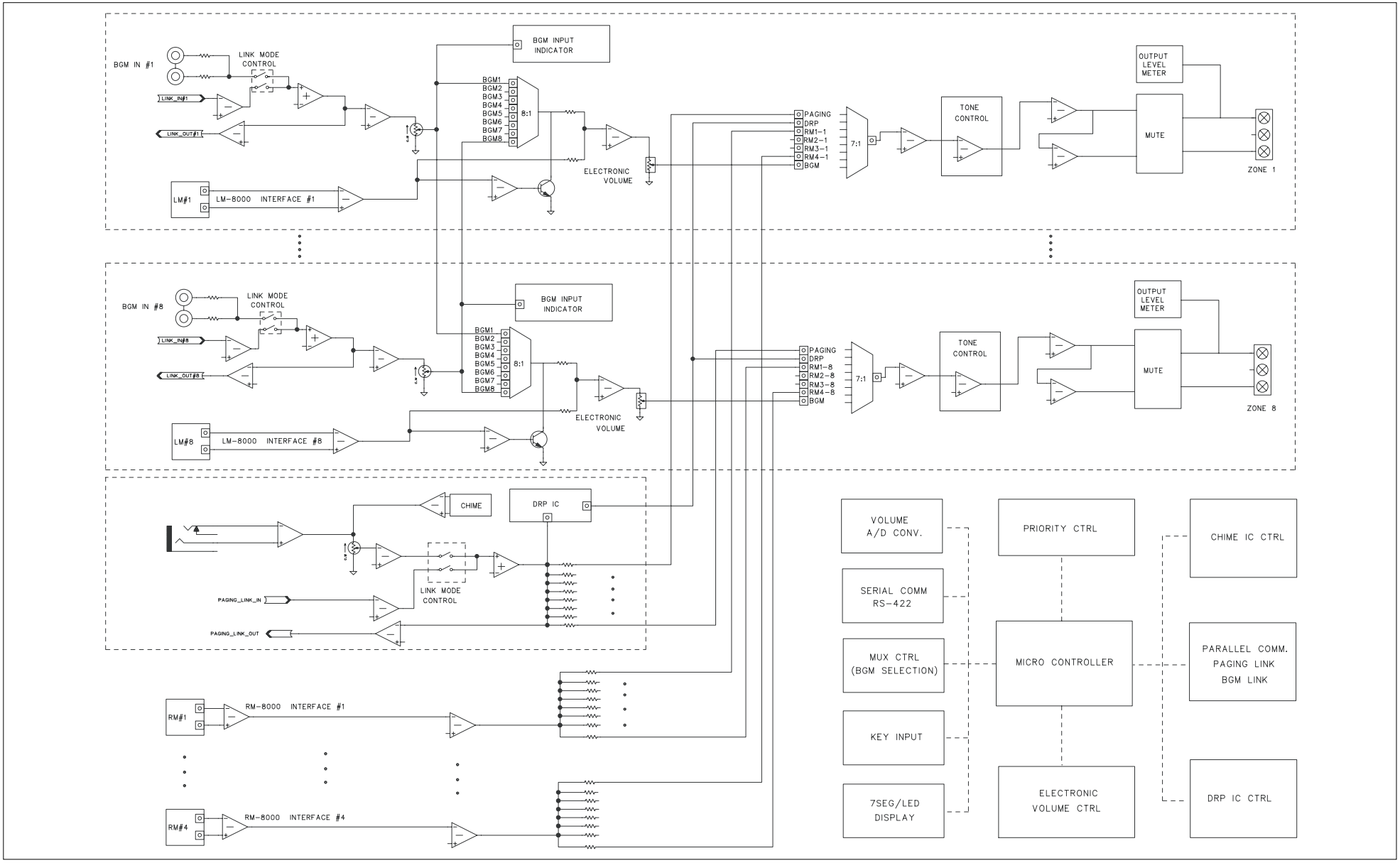

SCHEMATIC DIAGRAM (PX-8000)

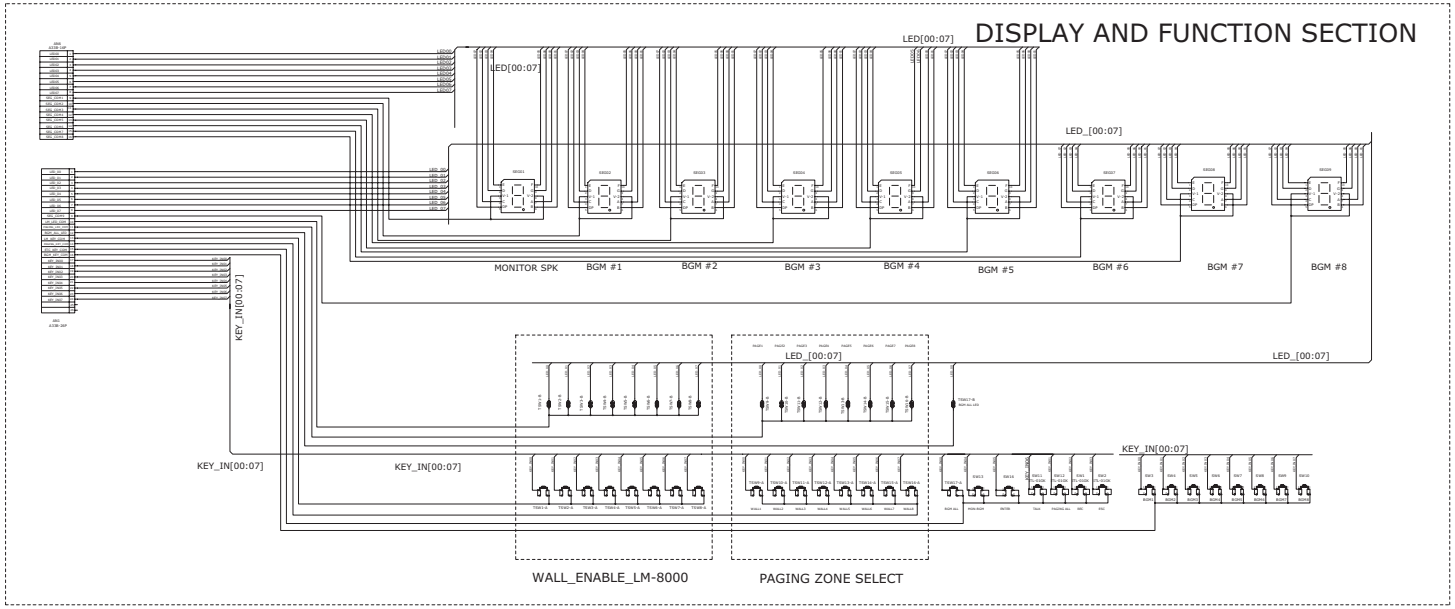

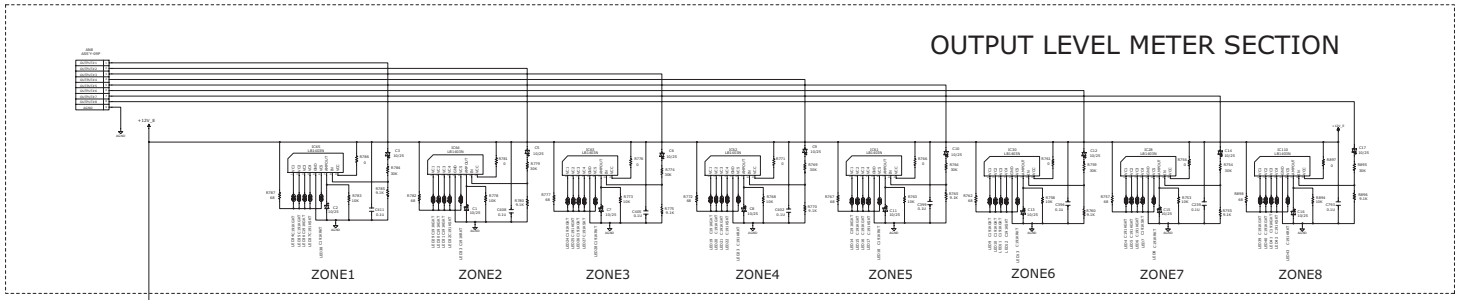

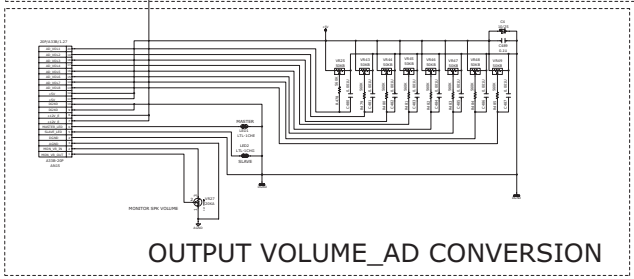

4000007600 PX-8000 FRONT B'D

SCHEMATIC DIAGRAM (PX-8000)

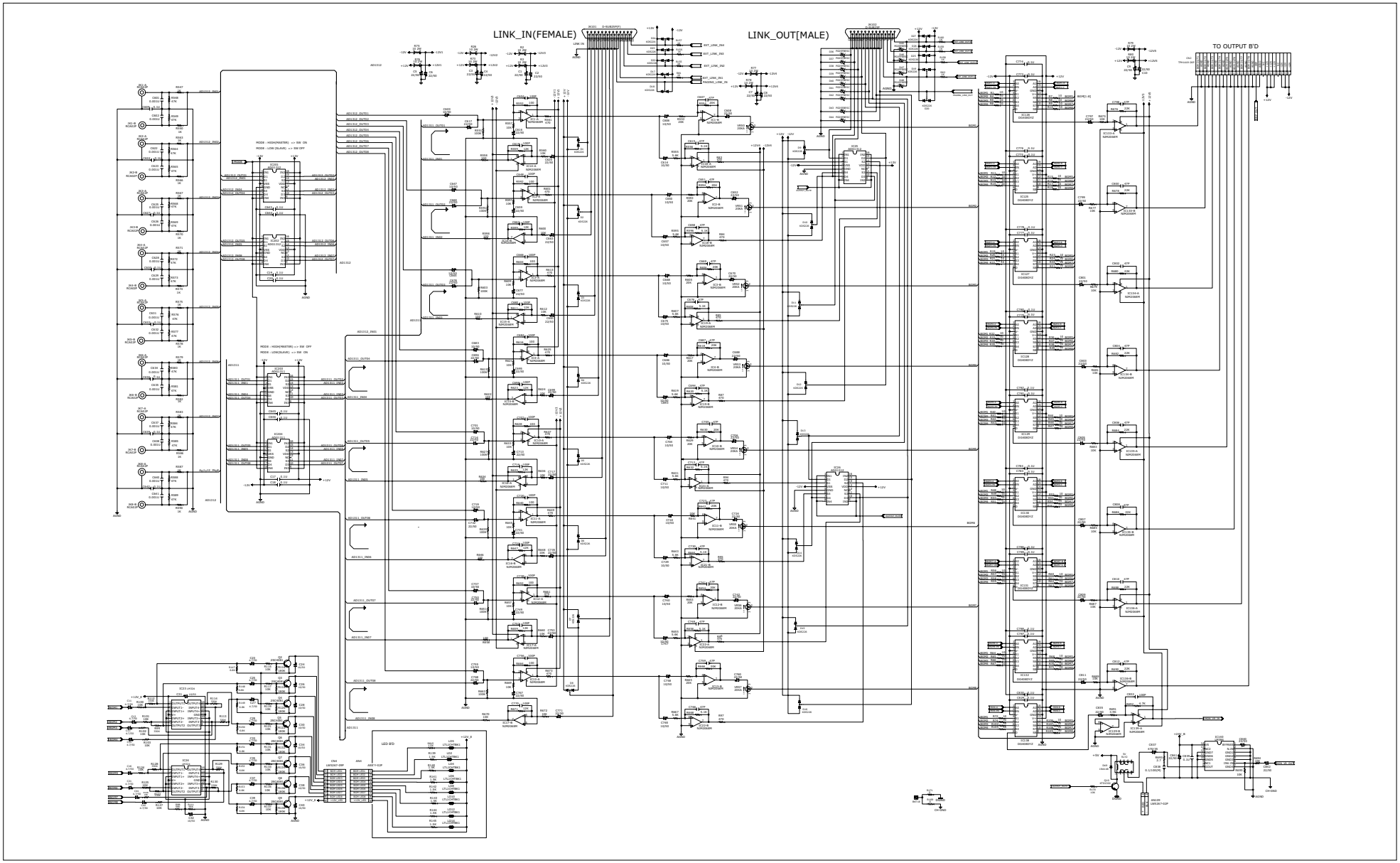

SCHEMATIC DIAGRAM (PX-8000)

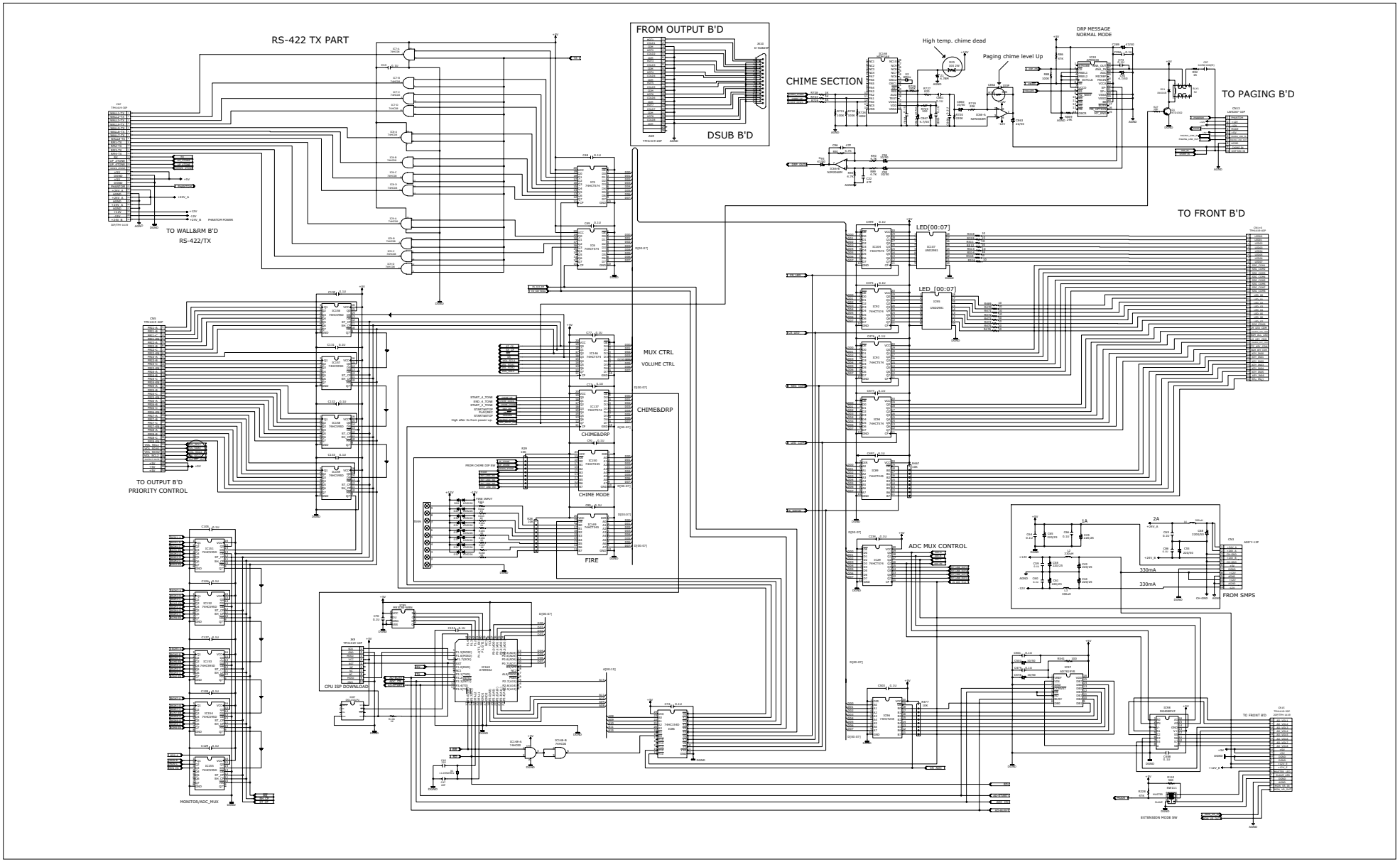

SCHEMATIC DIAGRAM (PX-8000)

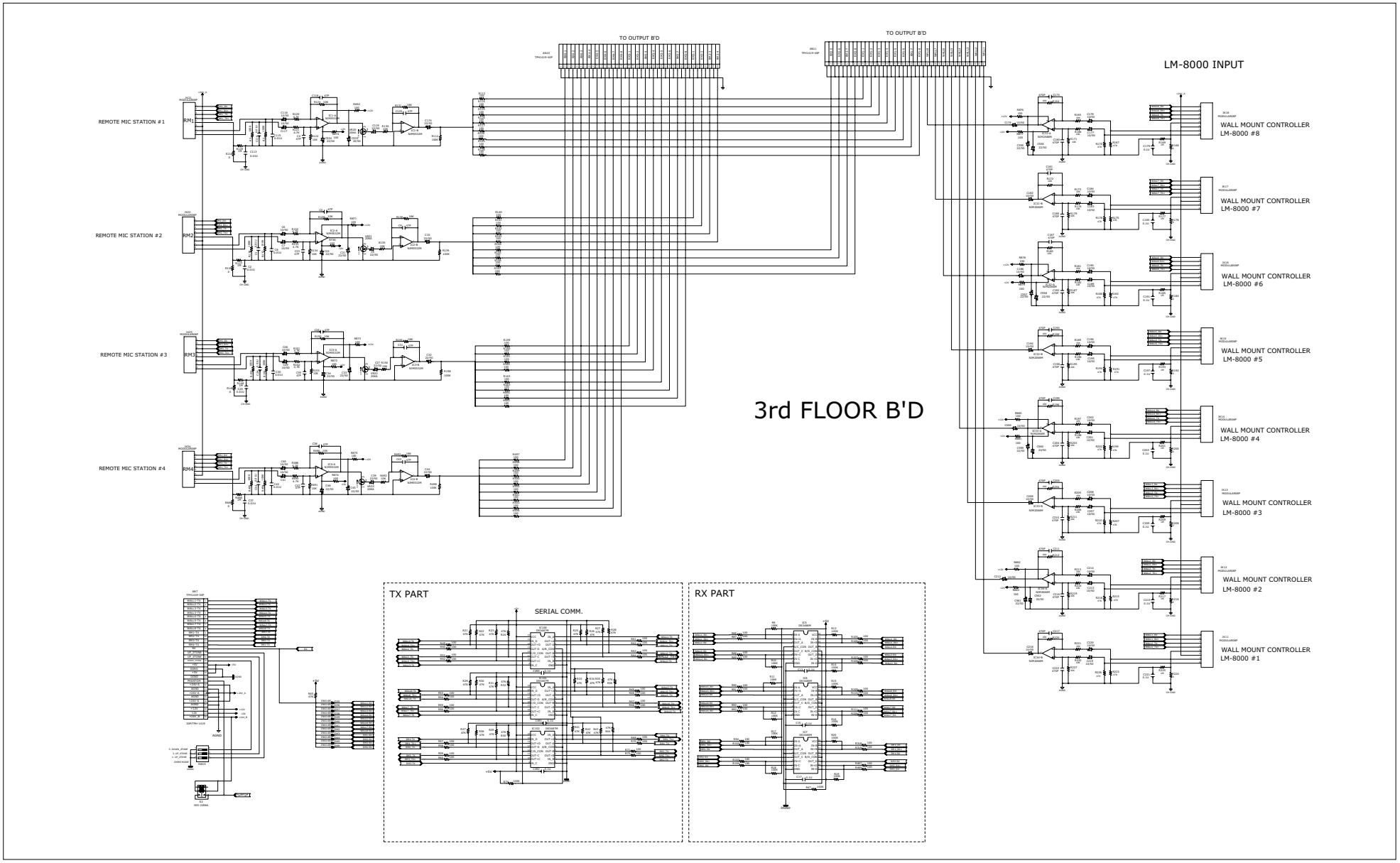

SCHEMATIC DIAGRAM (PX-8000)

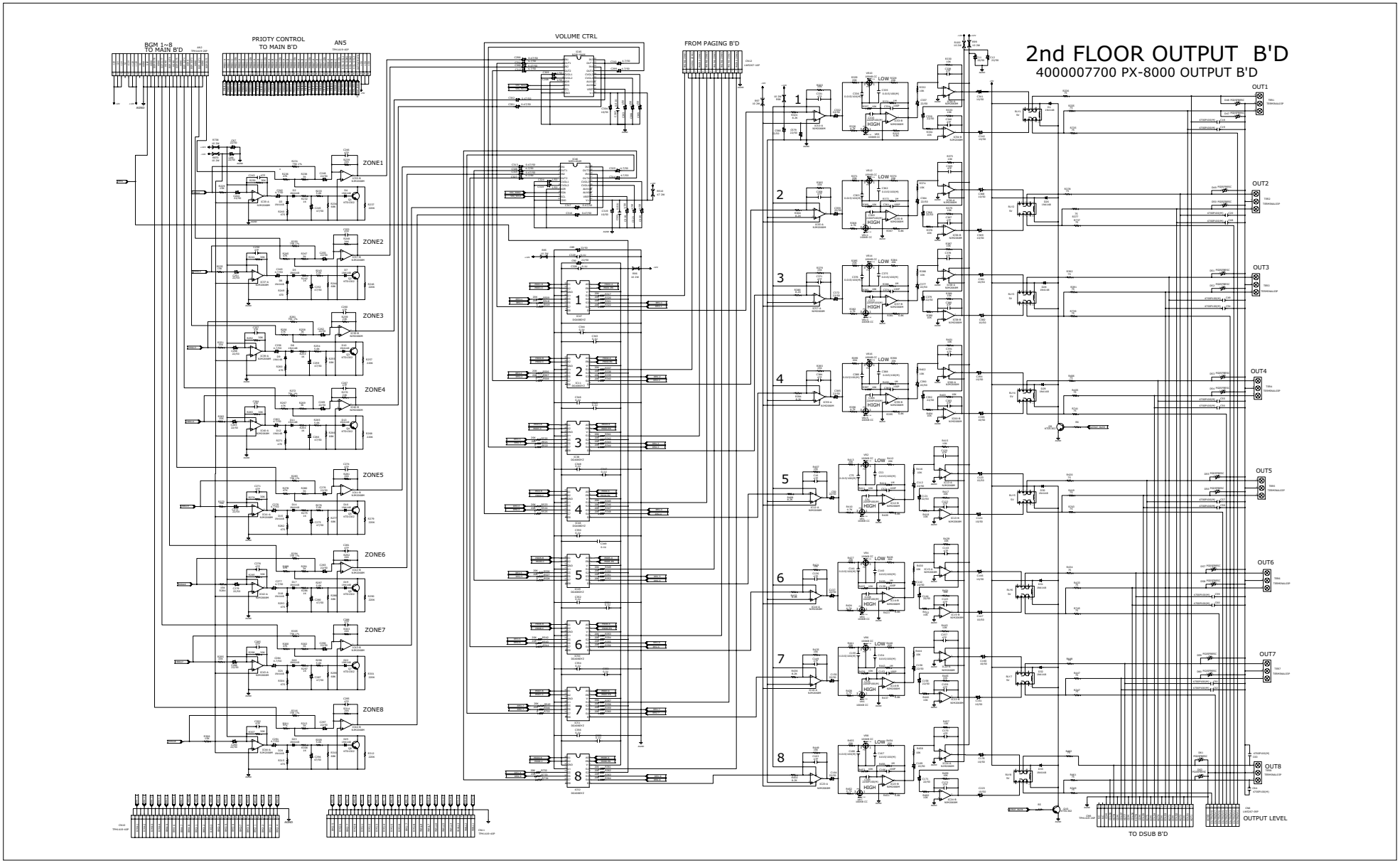

PAGING MIC B'D 4000007720

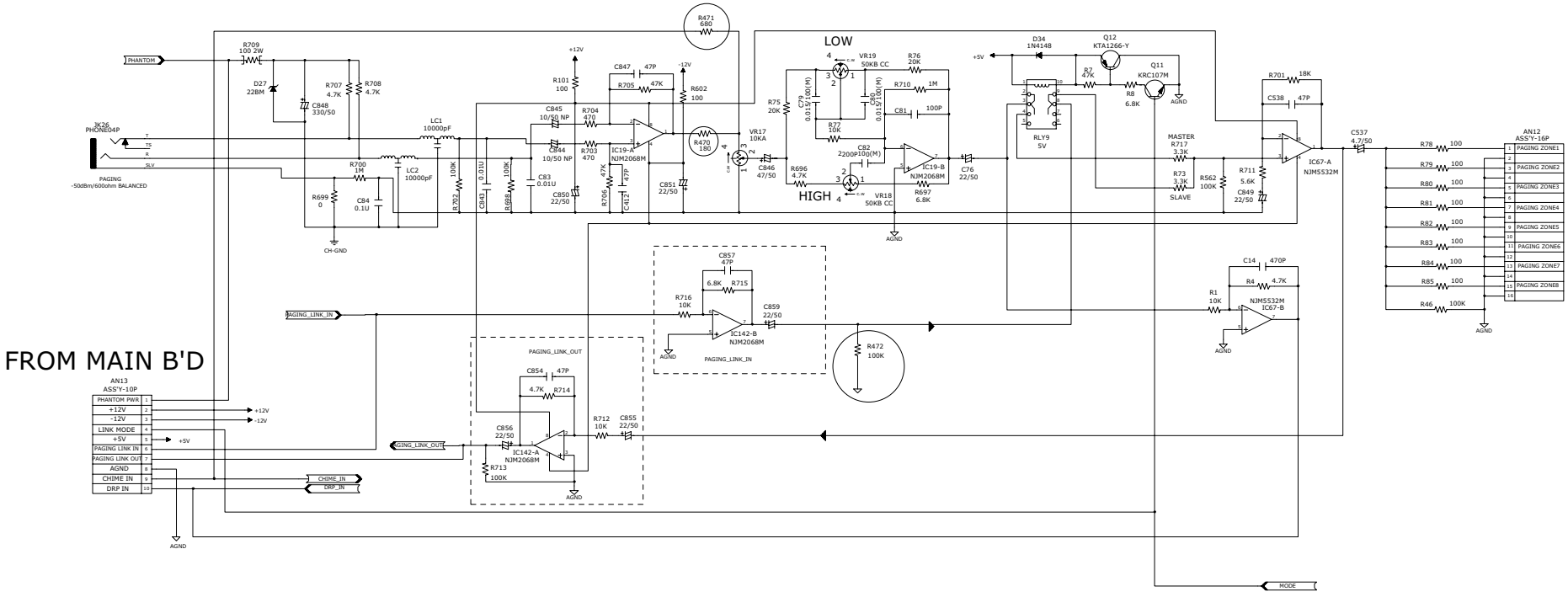

SCHEMATIC DIAGRAM (LM-8000)

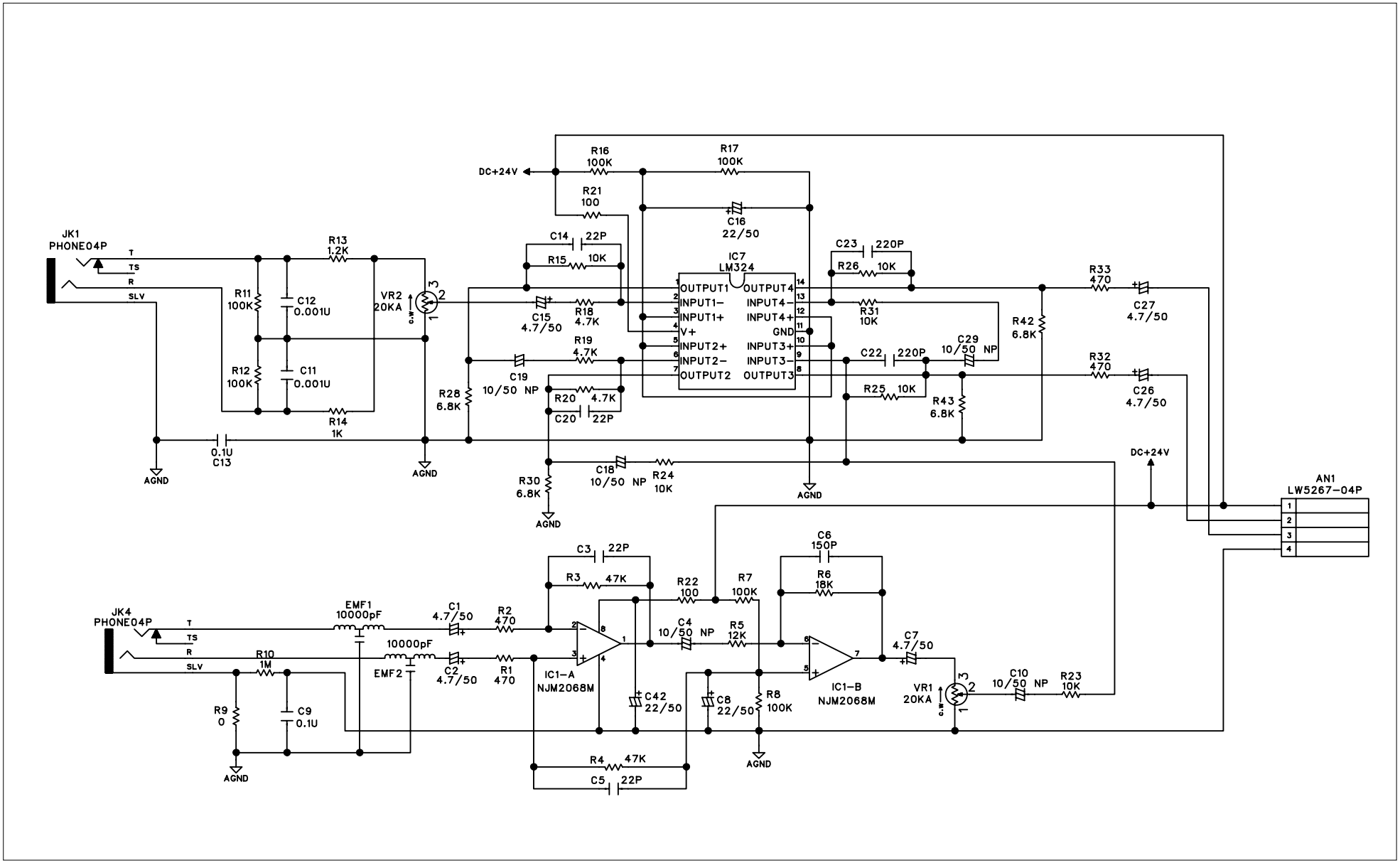

SCHEMATIC DIAGRAM (LM-8000)

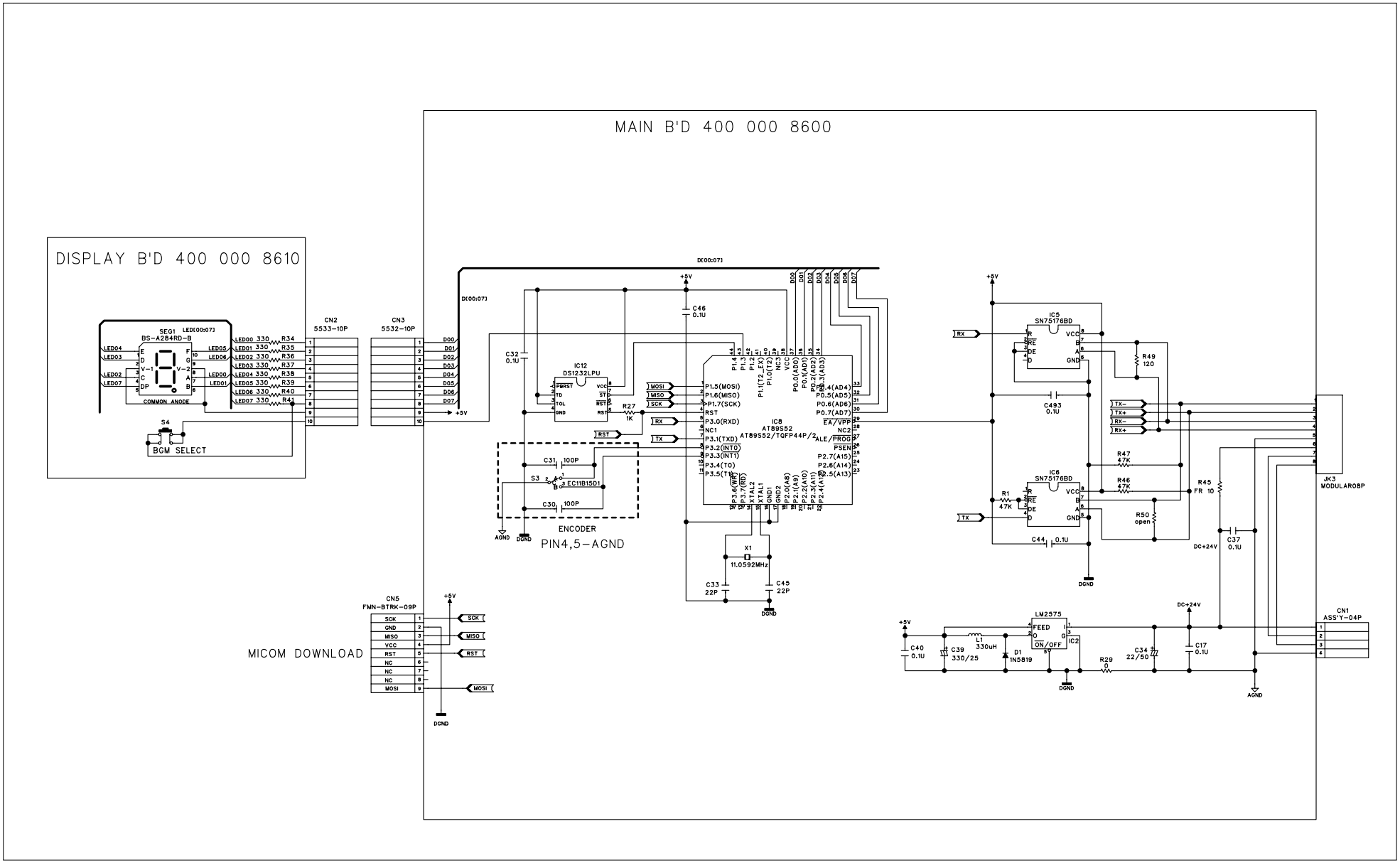

SCHEMATIC DIAGRAM (RM-8000)

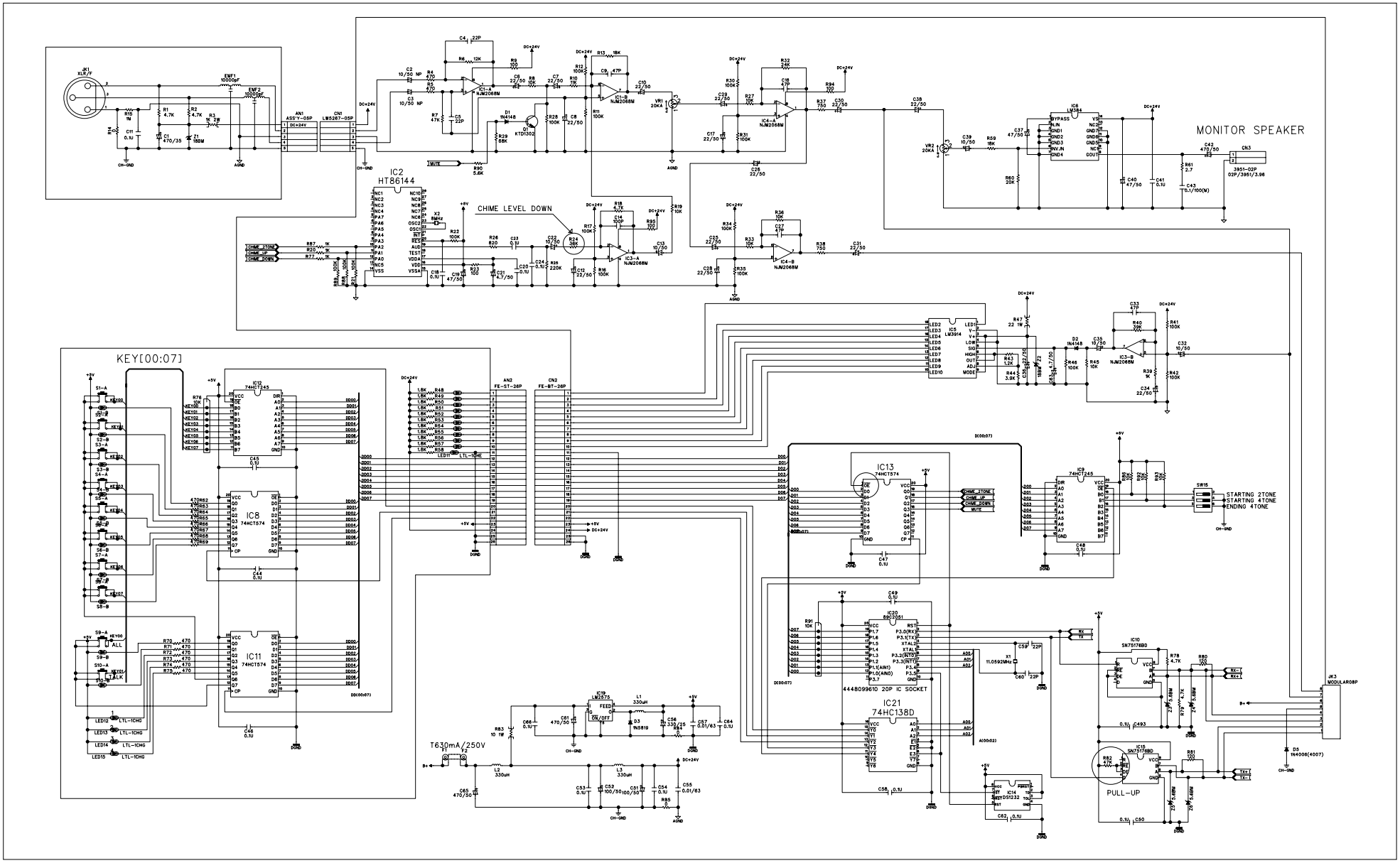

EXPLODED VIEW OF CABINET & CHASSIS / MECHANICAL PARTS LIST (PX-8000)

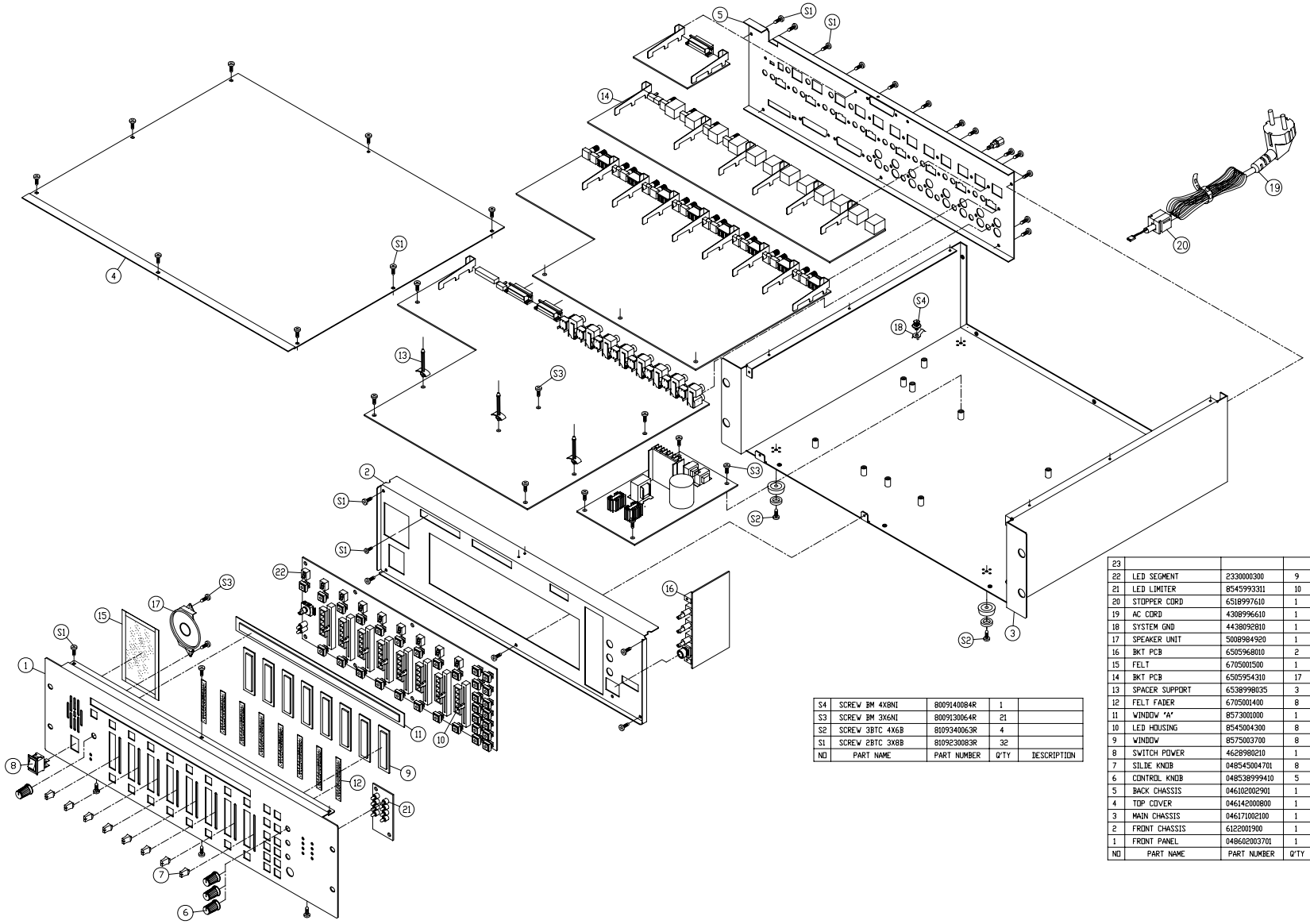

NO	PART NAME	PART NUMBER	Q'TY	DESCRIPTION
S4	SCREW BM 4XBNI	8009140084R	1	
S3	SCREW BM 3X6NI	8009130064R	21	
S2	SCREW 3BTC 4X6B	8109340063R	4	
S1	SCREW 2BTC 3X8B	8109230083R	32	

NO	PART NAME	PART NUMBER	Q'TY	DESCRIPTION
23				
22	LED SEGMENT	2330000300	9	
21	LED LIMITER	8545993311	10	
20	STOPPER CORD	6518997610	1	
19	AC CORD	4308996610	1	
18	SYSTEM GND	4438092810	1	
17	SPEAKER UNIT	5008984920	1	
16	BKT PCB	6505968010	2	
15	FELT	6705001500	1	
14	BKT PCB	6505954310	17	
13	SPACER SUPPORT	6538998035	3	
12	FELT FADER	6705001400	8	
11	WINDOW "A"	8573001000	1	
10	LED HOUSING	8545004300	8	
9	WINDOW	8575003700	8	
8	SWITCH POWER	4628980210	1	
7	SILDE KNOB	048545004701	8	
6	CONTROL KNOB	048538999410	5	
5	BACK CHASSIS	046102002901	1	
4	TOP COVER	046142000800	1	
3	MAIN CHASSIS	046171002100	1	
2	FRONT CHASSIS	6122001900	1	
1	FRONT PANEL	048602003701	1	

EXPLODED VIEW OF CABINET & CHASSIS / MECHANICAL PARTS LIST (LM-8000)

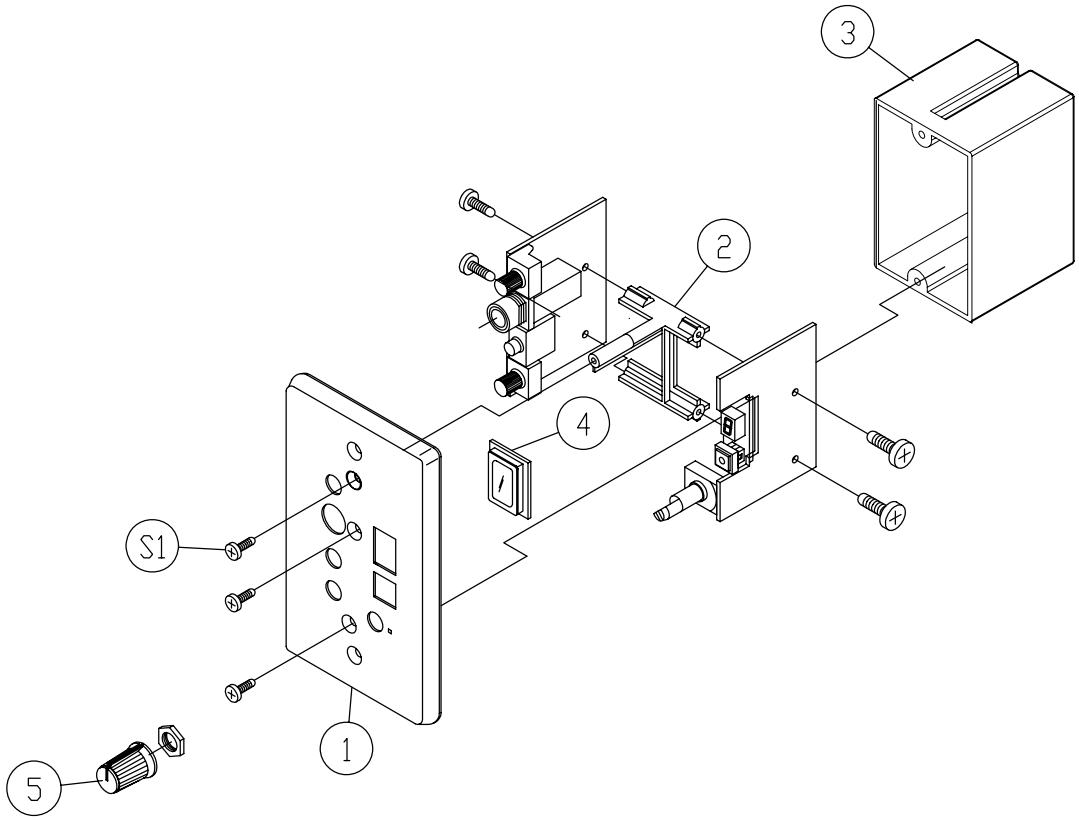

S1	SCREW 2BTC 3X8B	8095996510R	7	

5	KNOB CONTROL	048543987017	1	
4	WINDOW	048575986810	1	
3	BOTTOM COVER	8545004600	1	
2	GUIDE	8545004500	1	
1	FRONT PANEL	048605000401	1	
No.	PART NAME	PART NUMBER	Q'TY	REMARK

EXPLODED VIEW OF CABINET & CHASSIS / MECHANICAL PARTS LIST (RM-8000)

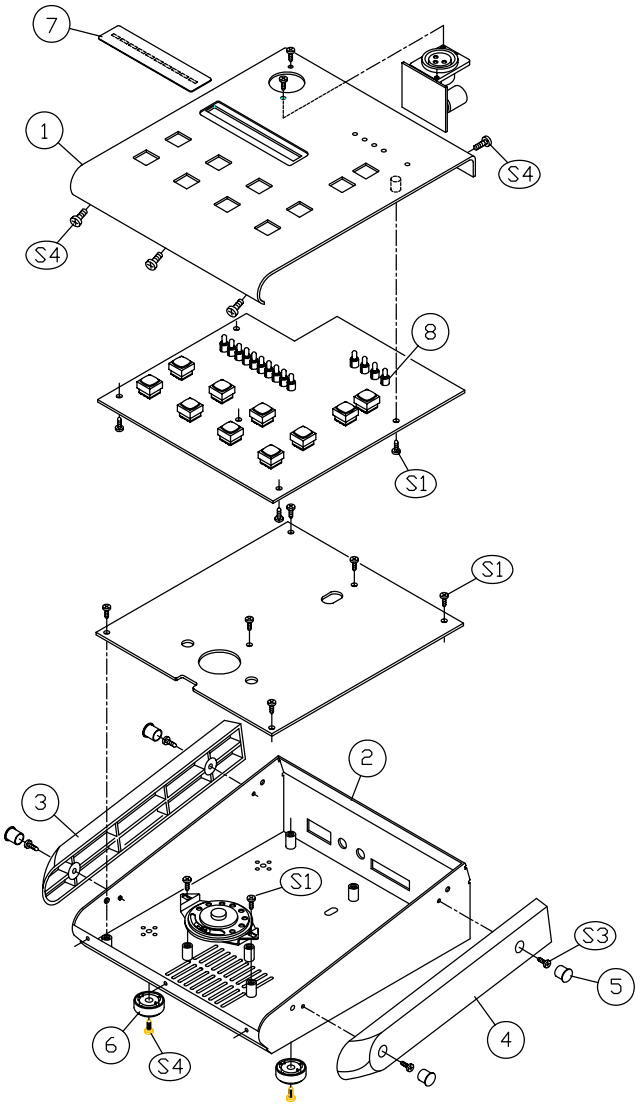

S5	SCREW #3BTC 4X8B	8109340083	4	
S4	SCREW #3BTC 3X6N	8109330064	4	
S3	SCREW #3BTC 3X6B	8095996520	4	
S2	DOT SCREW (2BTC 3*10B)	8095996520	2	
S1	SCREW BM 3X6NI	8095996520	11	

9				
8	LED LIMITER	8545993311	5	H=5.2
7	INLAY	8575987310	1	
6	FOOT	056335999520	4	
5	BUSHING CAP	6538995720	4	
4	SIDE PAD R	8543978520	1	
3	SIDE PAD L	8543978510	1	
2	MAIN CHASSIS	6122687810	1	
1	FRONT PANEL	8602962210	1	
No.	PART NAME	PART NUMBER	Q'TY	REMARK